Design for Code Acceptance 6

Prescriptive Residential Wood Deck Construction Guide

Based on the *2015 International Residential Code*

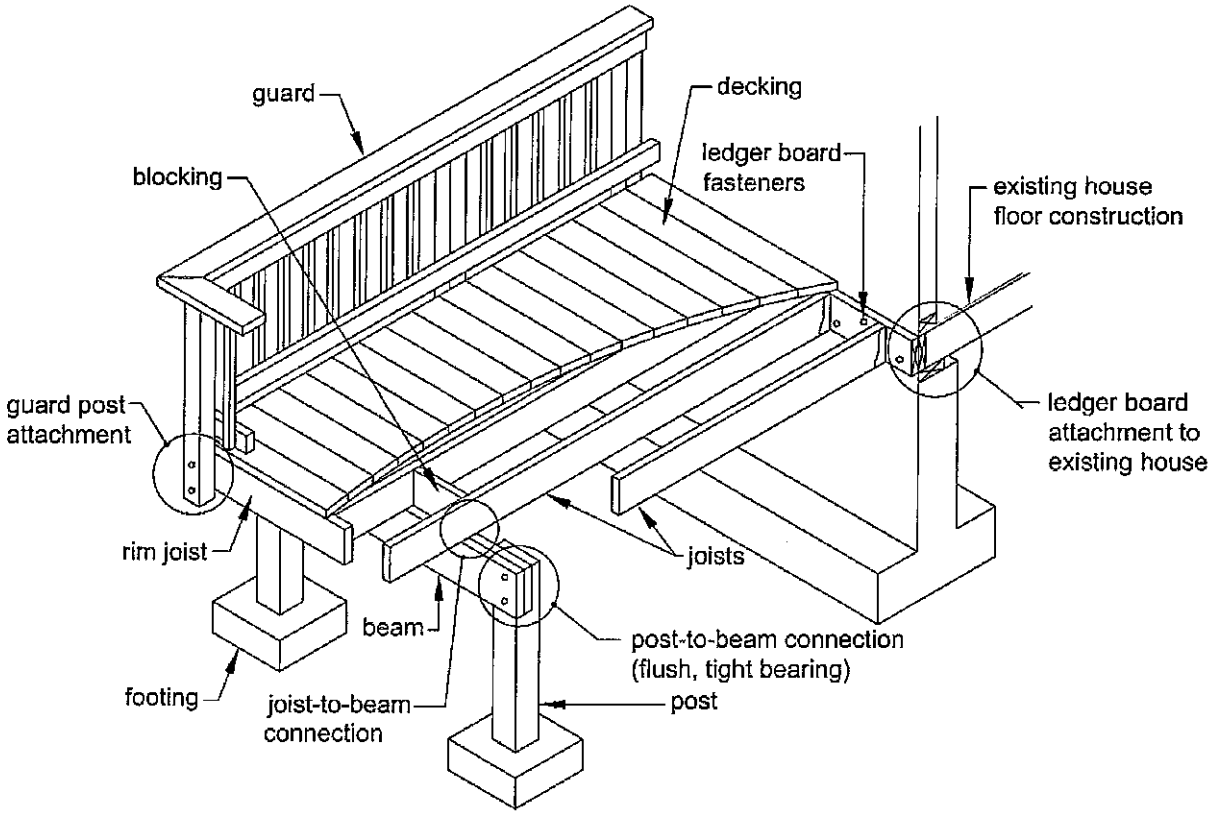

Where applicable, provisions and details contained in this document are based on the *International Residential Code (IRC)* [bracketed text references applicable sections of the *IRC*]. Prescriptive construction methods recommended meet or exceed minimum requirements of the *IRC*. Provisions that are not found in the *IRC* are recommended as good industry practice. Where differences exist between provisions of this document and the *IRC*, provisions of the *IRC* shall apply. This document is not intended to preclude the use of other construction methods or materials. All construction and materials must be *approved* by the authority having jurisdiction. Every effort has been made to reflect the language and intent of the *IRC*. However, no assurance can be given that designs and construction made in accordance with this document meet the requirements of any particular jurisdiction.

Copyright © 2018 American Wood Council

CONTENTS

MINIMUM REQUIREMENTS & LIMITATIONS 2
DECKING REQUIREMENTS 3
JOIST SIZE 3
BEAM SIZE & ASSEMBLY REQUIREMENTS 5
DECK FRAMING PLAN 8
JOIST-TO-BEAM CONNECTION 9
JOIST HANGERS 9
POST REQUIREMENTS 10
RIM JOIST REQUIREMENTS 11
FOOTINGS 11
LEDGER ATTACHMENT REQUIREMENTS 13
PROHIBITED LEDGER ATTACHMENTS 15
LEDGER BOARD FASTENERS 15
NON-LEDGER DECKS - VERTICAL LOADS 17
DECK LATERAL LOADS 17
GUARD REQUIREMENTS 19
GUARD POST ATTACHMENTS 19
STAIR REQUIREMENTS 20
STAIR HANDRAIL REQUIREMENTS 22
STAIR FOOTING REQUIREMENTS 22
STAIR LIGHTING REQUIREMENTS 22
FRAMING AT CHIMNEY OR BAY WINDOW 23

MINIMUM REQUIREMENTS & LIMITATIONS

1. This document applies to single level residential wood decks that are attached to the house to resist lateral forces. [R507.2.4]
2. Overall deck length shall be equal to or less than overall deck width. See DECK FRAMING PLAN for definition of deck length and width.
3. Minimum post size is 6x6 nominal and maximum post height shall be in accordance with Table 4.
4. All lumber shall be identified by the grade mark of, or certificate of inspection issued by, an *approved* lumber grading or inspection bureau or agency (www.alsc.org). All lumber and glued laminated timber shall be a naturally durable species (such as Redwood or Western Cedars where 90 percent or more of the width of each side is heartwood); or be preservatively treated with an *approved* process in accordance with American Wood Protection Association standards (Table 1) [R317 and R318]. All lumber in contact with the ground shall be *approved* preservative treated wood suitable for ground contact. [R317.1.2] All cuts shall be field treated with an *approved* preservative (such as copper naphthenate) [R402.1.2].
5. All nails shall meet the requirements of *ASTM F 1667*. Threaded nails as stated in this document include helical (spiral) and annular (ring-shank) nails. Wood screws shall meet the requirements of *ANSI/ASME B18.6.1*. Bolts and lag screws shall meet the requirements of *ANSI/ASME B18.2.1*.
6. Throughout this document, ½" diameter bolts and lag screws are specified for various connections. Edge distance and spacing requirements are based on ½" diameter fasteners. If larger (or smaller) fasteners are specified, edge distance and spacing shall be adjusted.
7. To resist corrosion, the following is required [R317.3]:
   - All screws, bolts, washers, nuts, and nails for use with preservative treated wood shall be hot-dipped zinc-coated galvanized steel, stainless steel, silicon bronze, or copper. Hot-dipped galvanized fasteners shall meet the requirements of *ASTM A 153*, Class D for fasteners $^3/_8$" diameter and smaller or Class C for fasteners with diameters over $^3/_8$". Stainless steel driven fasteners shall be in accordance with the material requirements of *ASTM F 1667*.
   - Fasteners other than nails and timber rivets shall be permitted to be of mechanically deposited zinc-coated steel with coating weights in accordance with *ASTM B 695*, Class 55, minimum.
   - All connectors (joist hangers, cast-in-place post anchors, etc.) shall be galvanized or shall be stainless steel. Hardware to be hot-dipped prior to fabrication shall meet *ASTM A 653*, G-185 coating. Hardware to be hot-dipped galvanized after fabrication shall meet *ASTM A 123*.
   - Fasteners and connectors exposed to salt water or located within 300 feet of a salt water shoreline shall be stainless steel grade 304 or 316.
   - Fasteners and connectors shall be of the same corrosion-resistant material.
   - Other coated or non-ferrous fasteners or hardware shall be *approved* by the authority having jurisdiction.
8. Decks supporting large concentrated loads such as hot tubs are beyond the scope of this document.
9. This document does not apply to decks which will experience snow loads, snow drift loads, or sliding snow loads that exceed 40 psf.
10. Lateral load resistance is limited to the prescriptive provisions of R507.2.4 of the IRC. Alternative loads and detailing shall be *approved* by the authority having jurisdiction.

11. Flashing shall be corrosion-resistant metal [R703.8] of minimum nominal 0.019-inch thickness or *approved* non-metallic material. Aluminum should not be used in direct contact with lumber treated with preservatives that contain copper such as ACQ, Copper Azole, or ACZA.
12. Decks shall not be used or occupied until final inspection and approval is obtained.
13. This document is not intended to preclude the use of other construction methods or materials not described herein.

Table 1. Common Species and Use Categories for Decay Resistance.[1]

	Species	Above Ground	Ground Contact
Preservative-Treated[2]	Southern Pine	X	X
	Douglas Fir-Larch	X	X
	Hem-Fir	X	X
	SPF	X	
	Ponderosa Pine	X	X
	Red Pine	X	X
	Redwood	X	X
	Western Cedars	X	
Naturally Durable[3]	Redwood	X	
	Western Cedars	X	

1. Use categories listed in Table 1 are based on the American Wood Protection Association (AWPA) *Book of Standards*.
2. Above Ground – UC3B; Ground Contact – UC4A.
3. Naturally durable species with 90% heartwood in width on each side need not be treated per minimum requirements.

DECKING REQUIREMENTS

All decking material shall be composed of dimension lumber (2" nominal thickness) or span rated decking in accordance with the American Lumber Standard Committee *Policy for Evaluation of Recommended Spans for Span Rated Decking Products (November 5, 2004)*. Attach decking to each joist with 2-8d threaded nails or 2-#8 screws. Space decking boards approximately $^1/_8$" apart. See Figure 11 for decking connection requirements at the rim joist. Decking placement may range from an angle perpendicular to the joists to an angle of 45 degrees to the joists. Each segment of decking must bear on a minimum of 3 joists (or 3 supports).

Decking not meeting these requirements may be substituted when the product has been *approved* by the authority having jurisdiction; however, connections equivalent to those shown for lumber or span rated decking are assumed.

JOIST SIZE

The span of a joist, L, is measured from the face of support at one end of the joist to the face of support at the other end of the joist and does not include the length of the overhangs, L_O. Use Table 2 to determine allowable joist span, L_J, based on lumber size and joist spacing. Joist span, L, must be less than or equal to allowable joist span, L_J. Overhang length is the lesser of allowable overhang, L_O, or one fourth the joist span, L/4. See Figure 1 and Figure 2 for joist span types.

Table 2. Maximum Joist Spans and Overhangs.[1]

Species	Size	Joist Spacing (o.c.) 12"	16"	24"	12"	16"	24"
		Allowable Span[2] (L_J)			Allowable Overhang[3] (L_O)		
Southern Pine	2x6[6]	9' - 11"	9' - 0"	7' - 7"	1' - 0"	1' - 1"	1' - 3"
	2x8	13' - 1"	11' - 10"	9' - 8"	1' - 10"	2' - 0"	2' - 4"
	2x10	16' - 2"	14' - 0"	11' - 5"	3' - 1"	3' - 5"	2' - 10"
	2x12	18' - 0"[7]	16' - 6"	13' - 6"	4' - 6"	4' - 2"	3' - 4"
Douglas Fir-Larch, Hem-Fir, Spruce-Pine-Fir[4]	2x6[6]	9' - 6"	8' - 4"	6' - 10"	0' - 11"	1' - 0"	1' - 2"
	2x8	12' - 6"	11' - 1"	9' - 1"	1' - 8"	1' - 10"	2' - 2"
	2x10	15' - 8"	13' - 7"	11' - 1"	2' - 10"	3' - 2"	2' - 9"
	2x12	18' - 0"[7]	15' - 9"	12' - 10"	4' - 4"	3' - 11"	3' - 3"
Redwood, Western Cedars, Ponderosa Pine[5], Red Pine[5]	2x6[6]	8' - 10"	8' - 0"	6' - 10"	0' - 9"	0' - 10"	0' - 11"
	2x8	11' - 8"	10' - 7"	8' - 8"	1' - 5"	1' - 7"	1' - 9"
	2x10	14' - 11"	13' - 0"	10' - 7"	2' - 5"	2' - 7"	2' - 8"
	2x12	17' - 5"	15' - 1"	12' - 4"	3' - 7"	3' - 9"	3' - 1"

1. Assumes 40 psf live load, 10 psf dead load, No. 2 grade, and wet service conditions.
2. Assumes L/360 deflection.
3. Maximum allowable overhang cannot exceed L/4 or ¼ of actual main span. Assumes cantilever length/180 deflection with 220 lb point load (See Figure 1A and Figure 2).
4. Incising assumed for Douglas Fir-Larch, Hem-Fir, and Spruce-Pine-Fir.
5. Design values based on northern species with no incising assumed.
6. Ledger shall be a minimum of 2x8 nominal. Joists and rim joists to which guard posts are attached shall be a minimum of 2x8 nominal.
7. Joist length prescriptively limited to 18'-0" for footing design.

Figure 1A. Joist Span – Joists Attached at House and Bearing Over Beam.

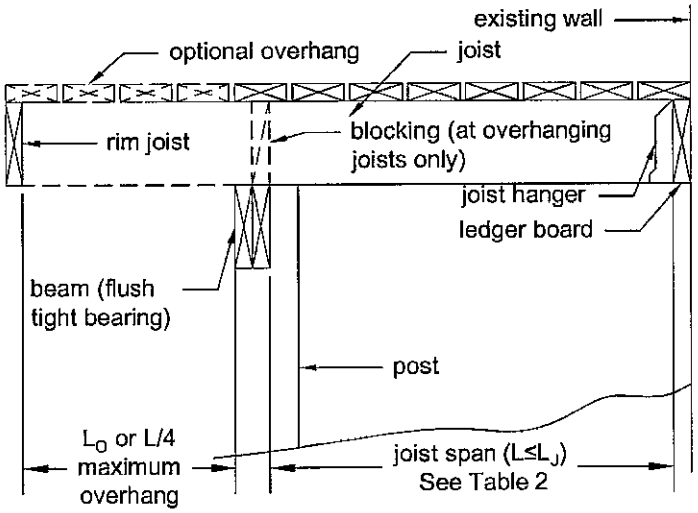

Figure 1B. Joist Span – Joists Attached at House and to Side of Beam.

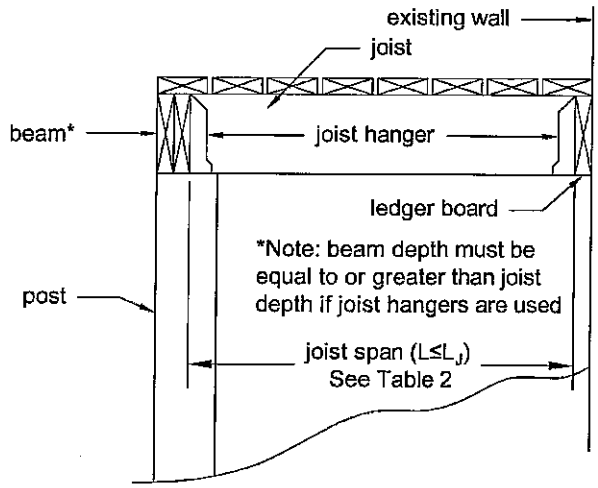

Figure 2. Joist Span – Non-Ledger Deck.

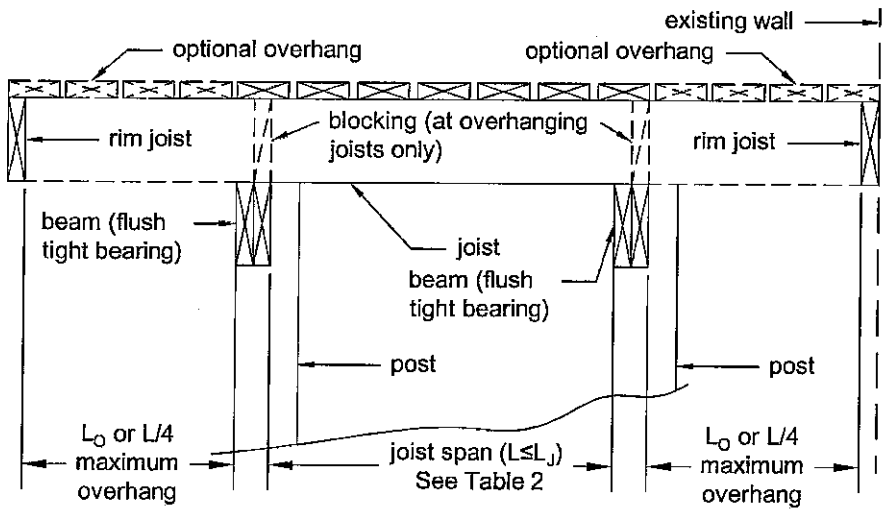

BEAM SIZE & ASSEMBLY REQUIREMENTS

Deck beam spans shall be in accordance with Table 3 and can extend past the post face up to $L_B/4$ as shown in Figure 3. Joists may bear on the beam and extend past the beam face up to the lesser of L_O or L/4 as shown in Figures 1A and 2, or the joists may attach to the side of the beam with joist hangers as shown in Figure 1B.

Joists shall not frame in from opposite sides of the same beam. See JOIST-TO-BEAM CONNECTION details, Figure 6.

Where multiple 2x members are used, the deck's beam is assembled by attaching the members identified in Table 3A in accordance with Figure 4 [Table R602.3(1)].

Table 3A. Dimension Lumber Deck Beam Spans (L_B)[1] Supporting a Single Span of Joists with or without Overhangs.

Species	Size[4]	Joist Spans (L) Less Than or Equal to: 6'	8'	10'	12'	14'	16'	18'
Southern Pine	2-2x6	6' - 8"	5' - 8"	5' - 1"	4' - 7"	4' - 3"	4' - 0"	3' - 9"
	2-2x8	8' - 6"	7' - 4"	6' - 6"	5' - 11"	5' - 6"	5' - 1"	4' - 9"
	2-2x10	10' - 1"	8' - 9"	7' - 9"	7' - 1"	6' - 6"	6' - 1"	5' - 9"
	2-2x12	11' - 11"	10' - 4"	9' - 2"	8' - 4"	7' - 9"	7' - 3"	6' - 9"
	3-2x6	7' - 11"	7' - 2"	6' - 5"	5' - 10"	5' - 5"	5' - 0"	4' - 9"
	3-2x8	10' - 7"	9' - 3"	8' - 3"	7' - 6"	6' - 11"	6' - 5"	6' - 1"
	3-2x10	12' - 9"	11' - 0"	9' - 9"	8' - 9"	8' - 3"	7' - 8"	7' - 3"
	3-2x12	15' - 0"	13' - 0"	11' - 7"	10' - 6"	9' - 9"	9' - 1"	8' - 7"
Douglas Fir-Larch[2], Hem-Fir[2], Spruce-Pine-Fir[2], Redwood, Western Cedars, Ponderosa Pine[3], Red Pine[3]	3x6 or 2-2x6	5' - 2"	4' - 5"	3' - 11"	3' - 7"	3' - 3"	2' - 10"	2' - 6"
	3x8 or 2-2x8	6' - 7"	5' - 8"	5' - 1"	4' - 7"	4' - 3"	3' - 10"	3' - 5"
	3x10 or 2-2x10	8' - 1"	7' - 0"	6' - 3"	5' - 8"	5' - 3"	4' - 10"	4' - 5"
	3x12 or 2-2x12	9' - 5"	8' - 2"	7' - 3"	6' - 7"	6' - 1"	5' - 8"	5' - 4"
	4x6	6' - 2"	5' - 3"	4' - 8"	4' - 3"	3' - 11"	3' - 8"	3' - 5"
	4x8	8' - 2"	7' - 0"	6' - 3"	5' - 8"	5' - 3"	4' - 11"	4' - 7"
	4x10	9' - 8"	8' - 4"	7' - 5"	6' - 9"	6' - 3"	5' - 10"	5' - 5"
	4x12	11' - 2"	9' - 8"	8' - 7"	7' - 10"	7' - 3"	6' - 9"	6' - 4"
	3-2x6	7' - 1"	6' - 5"	5' - 9"	5' - 3"	4' - 10"	4' - 6"	4' - 3"
	3-2x8	9' - 5"	8' - 3"	7' - 4"	6' - 8"	6' - 2"	5' - 9"	5' - 5"
	3-2x10	11' - 9"	10' - 2"	9' - 1"	8' - 3"	7' - 7"	7' - 1"	6' - 8"
	3-2x12	13' - 8"	11' - 10"	10' - 6"	9' - 7"	8' - 10"	8' - 3"	7' - 10"

1. Assumes 40 psf live load, 10 psf dead load, L/360 simple span beam deflection limit, cantilever length/180 deflection limit, No. 2 grade, and wet service conditions.
2. Incising assumed for Douglas Fir-Larch, Hem-Fir, and Spruce-Pine-Fir.
3. Design values based on northern species with no incising assumed.
4. Beam depth must be equal to or greater than joist depth if joist hangers are used (see Figure 6, Option 3).

Table 3B. Glued Laminated Timber Beam Spans (L_B)[1] Supporting a Single Span of Joists with or without Overhangs.

Stress Class[2]	Width[3]	Depth[4]	Joist Spans (L) Less Than or Equal to: 6'	8'	10'	12'	14'	16'	18'
Balanced or Unbalanced 20F-1.5E And Higher Grade Cedar	3-1/2"	9-1/2"	12'-2"	10'-6"	9'-4"	8'-6"	7'-10"	7'-4"	6'-11"
		11-7/8"	15'-2"	13'-1"	11'-8"	10'-8"	9'-10"	9'-2"	8'-8"
		14"	17'-10"	15'-5"	13'-9"	12'-7"	11'-7"	10'-10"	10'-2"
	5-1/4"	11-7/8"	18'-0"[5]	16'-8"	14'-10"	13'-7"	12'-6"	11'-8"	11'-0"
		14"	18'-0"[5]	18'-0"[5]	17'-6"	15'-11"	14'-9"	13'-9"	13'-0"
		16"	18'-0"[5]	18'-0"[5]	18'-0"[5]	18'-0"[5]	16'-10"	15'-9"	14'-10"
Unbalanced 24F-1.8E Douglas Fir-Larch or Southern Pine	3-1/2"	9-1/2"	13'-11"	12'-1"	10'-9"	9'-10"	9'-1"	8'-6"	8'-0"
		11-7/8"	17'-5"	15'-1"	13'-5"	12'-3"	11'-4"	10'-7"	10'-0"
		14"	18'-0"[5]	17'-9"	15'-10"	14'-5"	13'-4"	12'-6"	11'- 9"
	5-1/4"	11-7/8"	18'-0"[5]	18'-0"[5]	17'-1"	15'-7"	14'-5"	13'-6"	12'-8"
		14"	18'-0"[5]	18'-0"[5]	18'-0"[5]	18'-0"[5]	17'-0"	15'-10"	14'-11"
		16"	18'-0"[5]	18'-0"[5]	18'-0"[5]	18'-0"[5]	18'-0"[5]	18'-0"[5]	17'-0"
Balanced 24F-1.8E Douglas Fir-Larch or Southern Pine	3-1/2"	9-1/2"	13'-11"	12'-7"	11'-8"	11'-0"	10'-5"	9'-11"	9'-7"
		11-7/8"	17'-5"	15'-10"	14'-8"	13'-9"	13'-1"	12'-6"	12'-0"
		14"	18'-0"[5]	18'-0"[5]	17'-4"	16'-3"	15'-5"	14'-9"	14'-2"
	5-1/4"	11-7/8"	18'-0"[5]	18'-0"[5]	17'-4"	16'-3"	15'-5"	14'-9"	14'-2"
		14"	18'-0"[5]	18'-0"[5]	18'-0"[5]	18'-0"[5]	18'-0"[5]	17'-6"	16'-9"
		16"	18'-0"[5]	18'-0"[5]	18'-0"[5]	18'-0"[5]	18'-0"[5]	18'-0"[5]	18'-0"[5]

1. Assumes 40 psf live load, 10 psf dead load, L/360 simple span beam deflection limit, cantilever length/180 deflection limit. Glued laminated timber shall be of naturally durable species or treated with an oil-borne or water-borne preservative in accordance with AWPA U1. See MINIMUM REQUIREMENTS & LIMITATIONS. Spans for glued laminated timber beams not treated with oil-borne preservatives shall be multiplied by 0.89.
2. Preservative treated structural composite lumber of equal or greater capacity can be substituted.
3. Beam widths of 3-1/8" or wider can be used for the tabulated 3-1/2" width, and beam widths of 5-1/8" or wider can be used for the tabulated 5-1/4" width.
4. Beam depth must be equal to or greater than joist depth if joist hangers are used (see Figure 6, Option 3).
5. Beam span prescriptively limited to 18'-0" for footing design.

Figure 3. Beam Span.

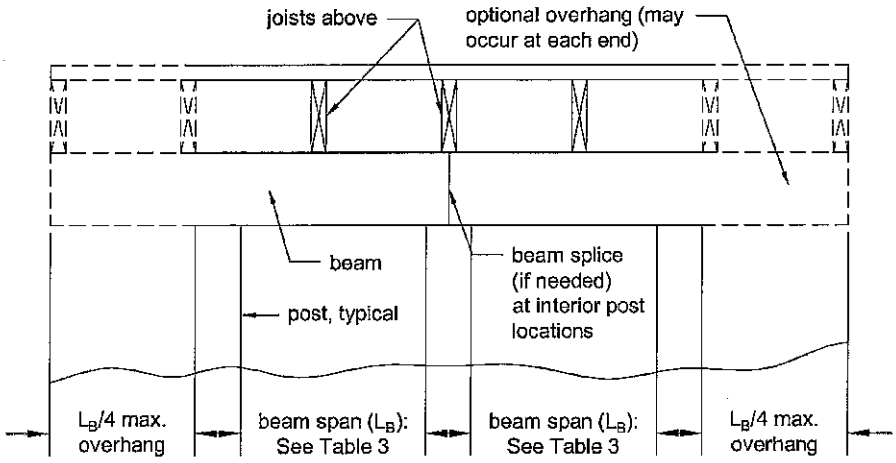

Figure 4. Beam Assembly Details.

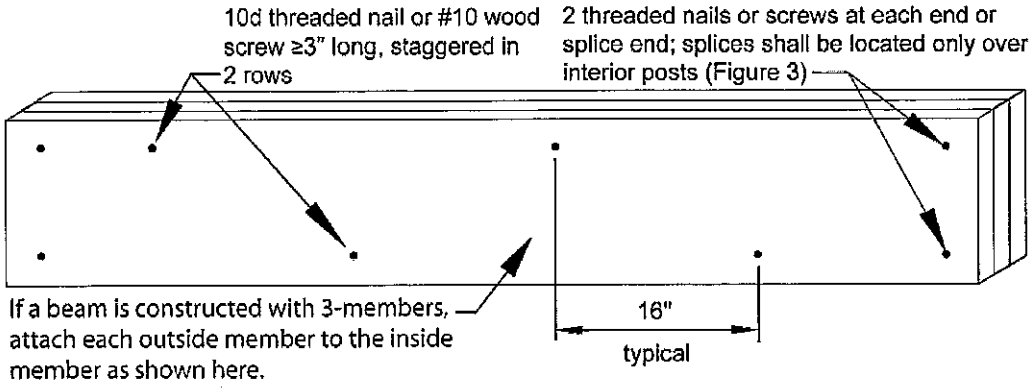

DECK FRAMING PLAN

A framing plan shows the width, length, joist and beam layout; the location of the ledger board, posts, and footings; and the type, size, and spacing of the ledger board fasteners.

The overall deck length shall be equal to or less than the overall deck width. Stairs and stair landings shall not be included in determining the overall deck length or width. See Figure 5 for an example of a typical deck framing plan.

Figure 5. Typical Deck Framing Plan.

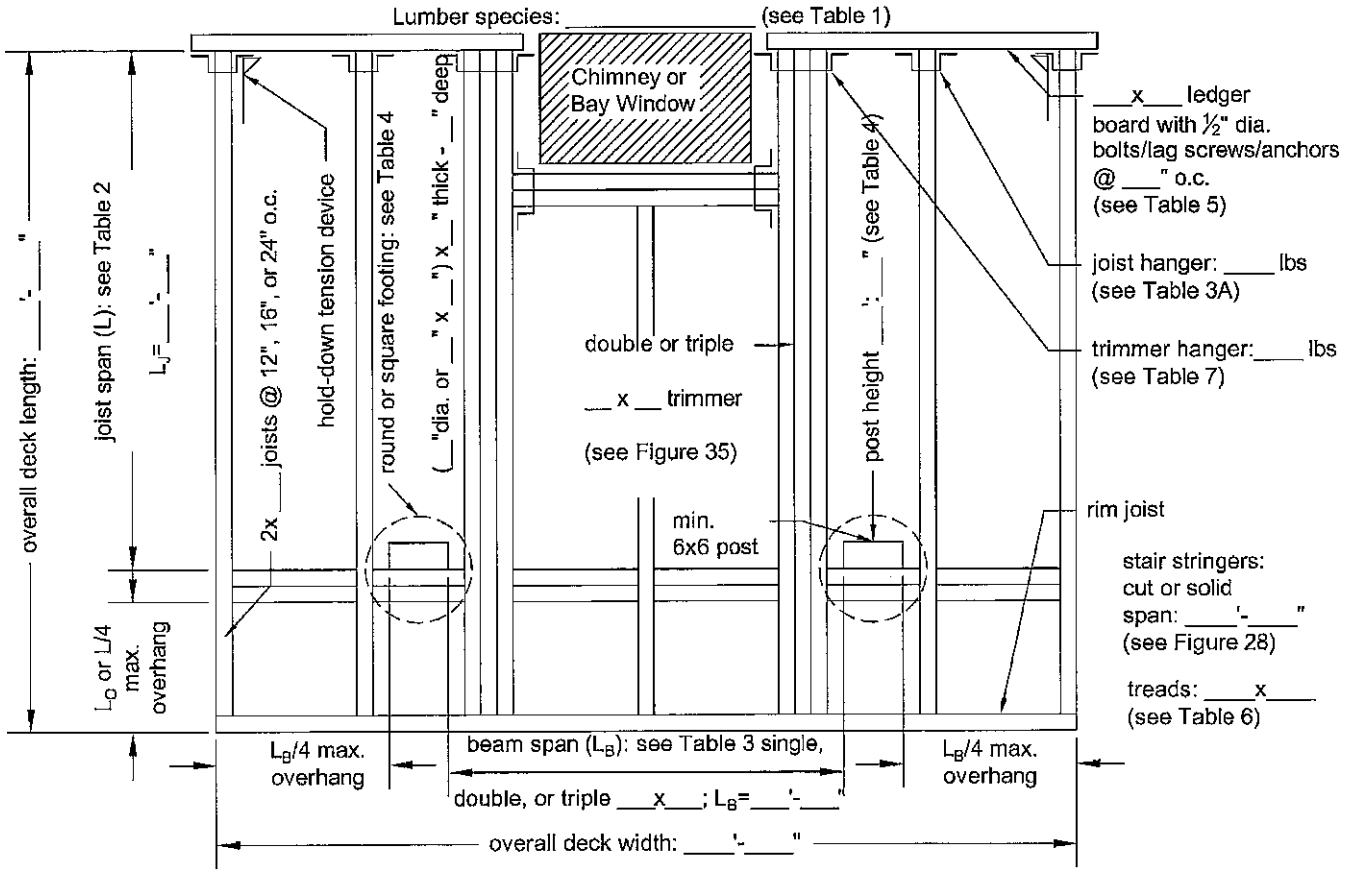

JOIST-TO-BEAM CONNECTION

Each joist shall be attached to the beam as shown in Figure 6. Joists may bear on and overhang past the beam face the lesser of L_O or L/4 when Option 1 or Option 2 is used to attach the joist to the beam and blocking is provided between joists at beam bearing. Mechanical fasteners or hurricane clips used, as shown in Option 2, must have a minimum capacity of 100 lbs in both uplift and lateral load directions. Joists may also attach to the side of the beam with joist hangers per Option 3. Joists shall not frame in from opposite sides of the same beam. See JOIST HANGERS for more information. Hangers, clips, and mechanical fasteners shall be galvanized or stainless steel (see MINIMUM REQUIREMENTS).

Figure 6. Joist-to-Beam Detail.

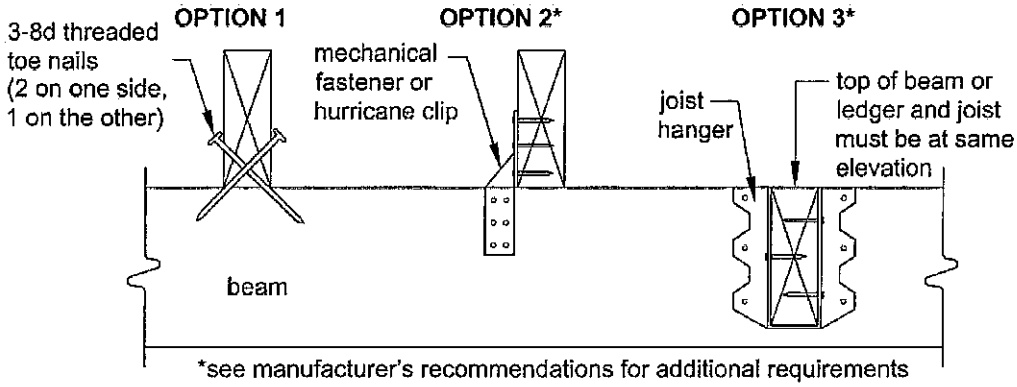

JOIST HANGERS

Joist hangers, as shown in Figure 7, shall have a depth of at least 60% of ledger or beam depth. Each hanger shall have a minimum vertical capacity in accordance with Table 3A. The joist hanger shall be selected from an *approved* manufacturer's product data based on the dimensions of the joist or header it is carrying. Joist hangers and fasteners shall be corrosion resistant (see MINIMUM REQUIREMENTS).

Use joist hangers with inside flanges when clearances to the edge of the beam or ledger board dictate. **Do not use clip angles or brackets to support joists.**

Table 3A. Joist Hanger Vertical Capacity.

Joist Size	Minimum Capacity, lbs
2x6	400
2x8	500
2x10	600
2x12	700

Figure 7. Typical Joist Hangers.

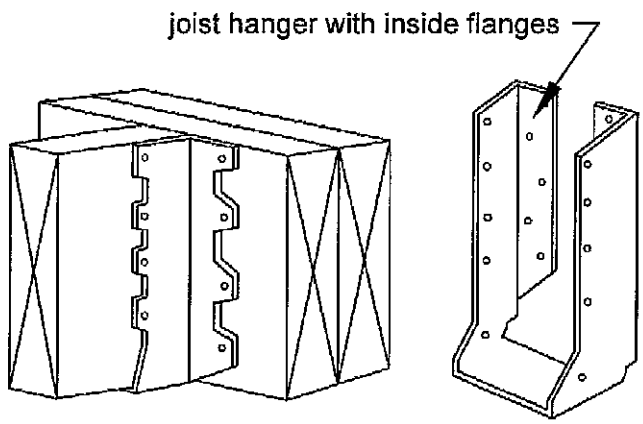

POST REQUIREMENTS

All deck post sizes shall be 6x6 (nominal) or larger, and the maximum height shall be in accordance with Table 4 and measured from grade or top of foundation, whichever is highest, to the underside of the beam. Under prescriptive limits of this document, 8x8 nominal posts can be substituted anywhere in Table 4 but are limited to a maximum height of 14'-0". Posts shall be centered on footings. Cut ends and notches of posts shall be field treated with an *approved* preservative (such as copper naphthenate) [R402.1.2]. The beam shall be attached to the post by notching as shown in Figure 8A or by providing an *approved* post cap to connect the beam and post as shown in Figure 8B. All 3-ply beams shall be connected to the post by a post cap. All through-bolts shall have washers under the bolt head and nut. Attachment of the beam to the side of the post without notching is prohibited (see Figure 9).

Provide diagonal bracing parallel to the beam at each corner post greater than 2'-0" in height as shown in Figure 10. Diagonal bracing is prohibited on center posts. Bracing shall be fastened to the post at one end and the beam at the other with ½" diameter lag screws. For non-ledger decks, (see Figure 21) diagonal bracing may be omitted at the beam and posts adjacent to the house.

Figure 8A. Post-to-Beam Attachment Requirements.

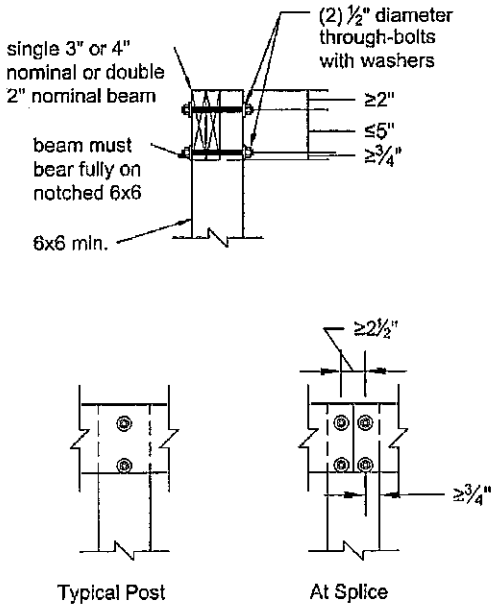

Figure 8B. Alternate *Approved* Post-to-Beam Post Cap Attachment.

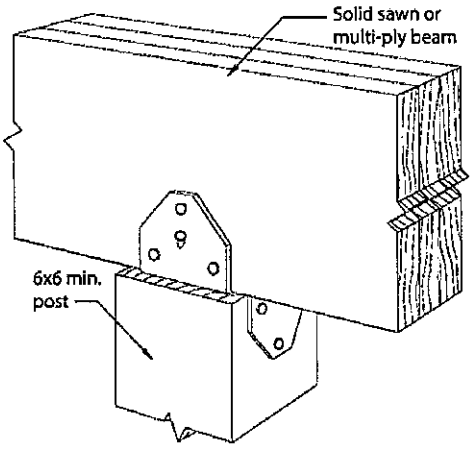

Figure 9. Prohibited Post-to-Beam Attachment Condition.

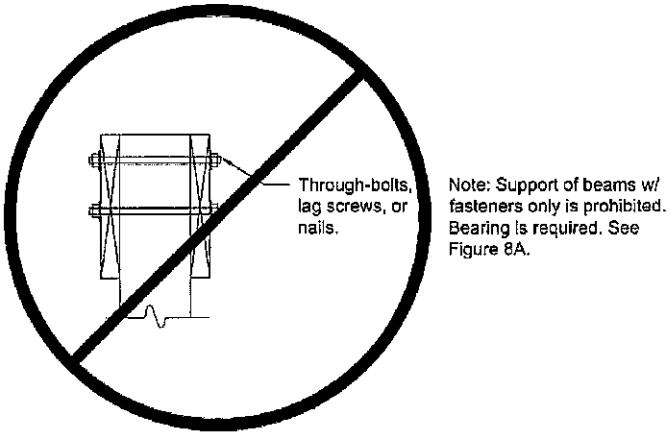

Figure 10. Diagonal Bracing.

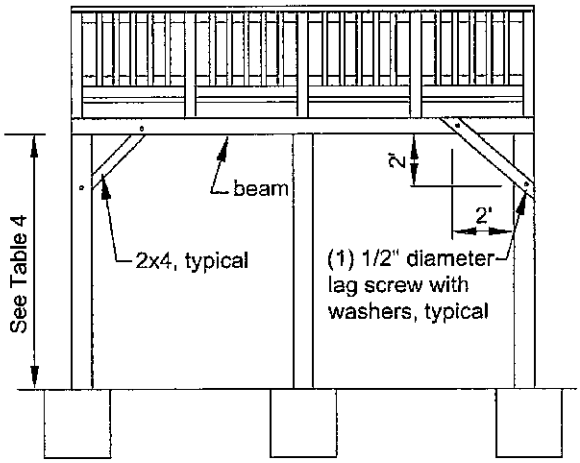

DIAGONAL BRACING PARALLEL TO BEAM
Note: Diagonal Bracing is prohibited on center posts.

RIM JOIST REQUIREMENTS

Attach a continuous rim joist to the ends of joists as shown in Figure 11. Attach decking to the rim joist as shown in Figure 11. For more decking attachment requirements, see DECKING REQUIREMENTS.

Figure 11. Rim Joist Connection Details.

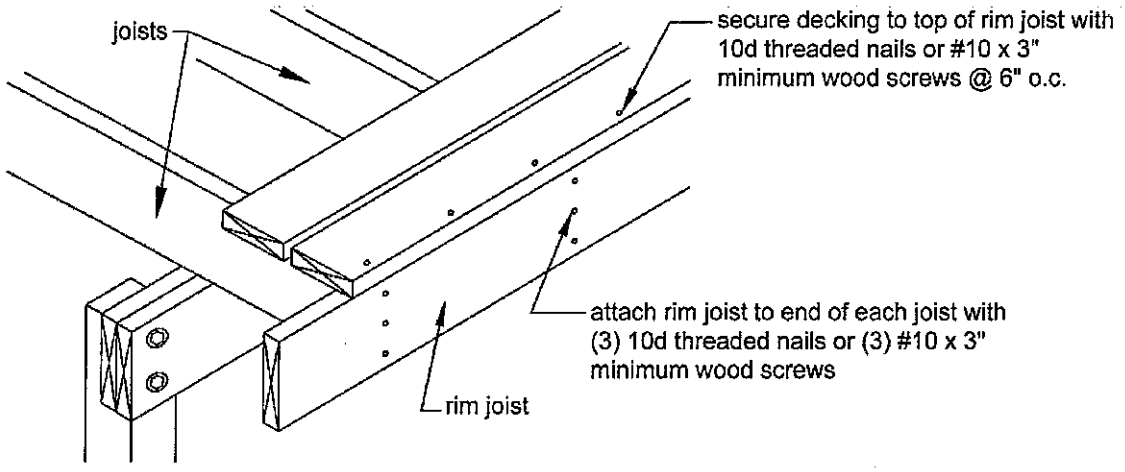

FOOTINGS [R403]

See Figure 12 and Table 4 for footing size, footing thickness, and post attachment options and requirements. All footings shall bear on undisturbed soil at least 12 inches below the undisturbed ground surface or below the frost line, whichever is deeper. Contact the authority having jurisdiction to determine the specified frost line. Bearing conditions shall be verified in the field by the building official prior to placement of concrete. Where the building official determines that in-place soils with an allowable bearing capacity of less than 1,500 psf are likely to be present at the site, the allowable bearing capacity shall be determined by a soils investigation. DECK FOOTINGS CLOSER THAN 5'-0" TO AN EXTERIOR HOUSE FOUNDATION WALL MUST BEAR AT THE SAME ELEVATION AS THE FOOTING OF THE HOUSE FOUNDATION.

Do not construct footings over septic systems or leach fields, utility lines, or enclosed meters. Contact local utilities (call 811) before digging.

Pre-manufactured post anchors shall be galvanized or stainless steel. See MINIMUM REQUIREMENTS.

Table 4. Post Height for 6x6[5] and Footing Sizes for all Posts.

Beam Span, L_B	Joist Span L_J	Post Heights[1]					Footing Sizes[2]		
		Southern Pine	Douglas Fir-Larch[3]	Hem-Fir[3], Western Cedars	Redwood	Ponderosa Pine, Red Pine, SPF[3]	Round Footing Diameter	Square Footing	Footing Thickness[4]
6'	≤10'	14'	14'	14'	14'	14'	18"	16"x16"	7"
	≤14'	14'	14'	14'	14'	14'	21"	18"x18"	8"
	≤18'	14'	14'	12'	14'	11'	24"	21"x21"	10"
8'	≤10'	14'	14'	14'	14'	14'	20"	18"x18"	8"
	≤14'	14'	14'	14'	14'	11'	24"	21"x21"	10"
	≤18'	14'	13'	11'	12'	8'	27"	24"x24"	11"
10'	≤10'	14'	14'	14'	14'	12'	23"	20"x20"	9"
	≤14'	14'	13'	11'	13'	8'	27"	24"x24"	11"
	≤18'	12'	11'	8'	11'	2'	31"	27"x27"	13"
12'	≤10'	14'	14'	12'	14'	10'	25"	22"x22"	10"
	≤14'	13'	12'	9'	11'	5'	30"	26"x26"	13"
	≤18'	11'	9'	6'	9'	2'	34"	30"x30"	15"
14'	≤10'	14'	13'	11'	13'	8'	27"	24"x24"	11"
	≤14'	11'	10'	7'	10'	2'	32"	29"x29"	14"
	≤18'	9'	8'	2'	8'	NP	37"	33"x33"	16"
16'	≤10'	13'	12'	10'	12'	6'	29"	26"x26"	12"
	≤14'	10'	9'	5'	9'	2'	35"	31"x31"	15"
	≤18'	7'	5'	2'	7'	NP	40"	35"x35"	18"
18'	≤10'	12'	11'	8'	11'	2'	31"	27"x27"	13"
	≤14'	9'	8'	2'	8'	NP	37"	33"x33"	16"
	≤18'	5'	2'	2'	6'	NP	42"	37"x37"	19"

1. Assumes 40 psf live load, 10 psf dead load, $L_B/4$ and $L_J/4$ overhangs, No 2. grade and wet service conditions.
2. Assumes 1,500 psf soil bearing capacity and 150 pcf concrete. Value may be multiplied by 0.9 for corner posts.
3. Incising assumed for Douglas Fir-Larch, Hem-Fir, and Spruce-Pine-Fir.
4. Assumes 2,500 psi compressive strength of concrete. Coordinate footing thickness with post base and anchor requirements.
5. 8x8 nominal posts may be substituted anywhere in Table 4 to a maximum height of 14'.

Figure 12. Typical Footing Options.

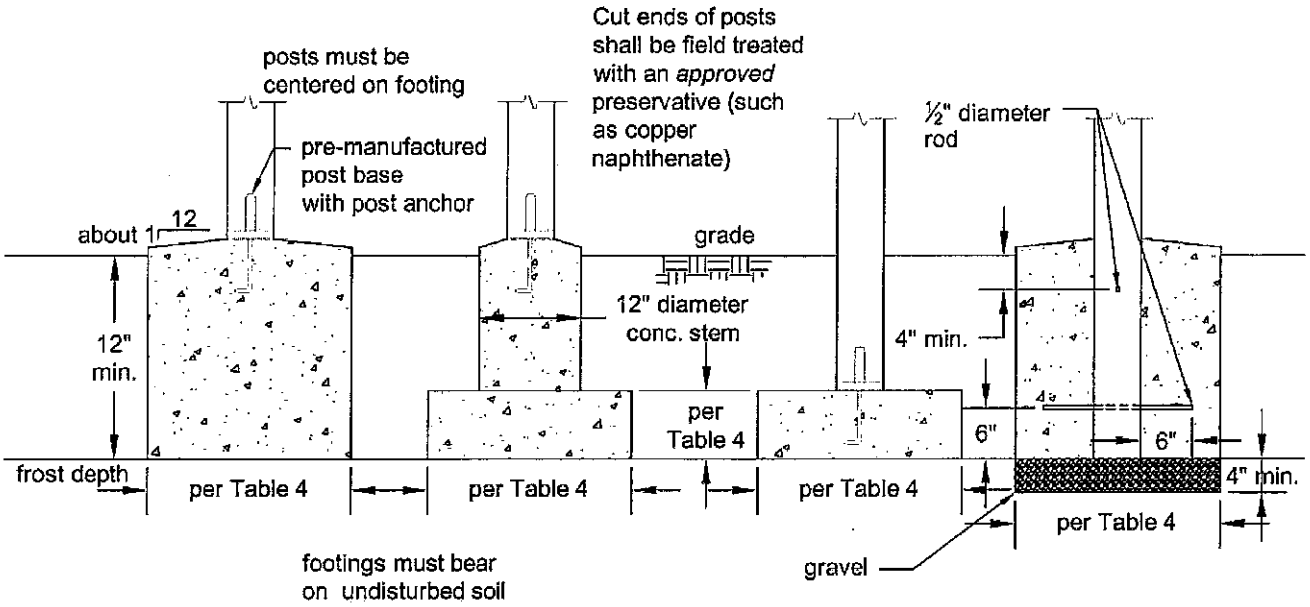

LEDGER ATTACHMENT REQUIREMENTS [R507]

GENERAL: Attach the ledger board, which shall be equal to or greater than the deck joist depth but less than or equal to the house band or rim joist depth, to the house in accordance with Figures 14 and 15. The ledger shall be a minimum nominal 2x8. When attachments are made to the house band joist, the band joist shall be capable of supporting the new deck. If this cannot be verified or conditions at the house differ from the details herein, then either a non-ledger deck or full plan submission is required. See NON-LEDGER DECKS.

SIDING AND FLASHING: House siding or the exterior finish system must be removed prior to installation of the ledger board. *Approved* corrosion resistant flashing is required at any ledger board connection to a wall of wood framed construction (see MINIMUM REQUIREMENTS). See Figure 14 for continuous flashing with drip edge. The threshold shall be carefully flashed and caulked to prevent water intrusion due to splash from the deck or melting snow and ice.

MANUFACTURED WOOD I-JOIST: The term "I-Joist" denotes manufactured wood "I" joists (see Figure 13A). Many new homes constructed with wood I-joists include 1" or thicker laminated veneer lumber (LVLas band joists (or rim joists) that can support the attachment of a deck (see Figure 14). However, some older homes might be constructed with band boards that are too thin (less than 1") to support a deck. In such cases, a non-ledger deck or a full plan submission is required.

MANUFACTURED WOOD TRUSS: A metal plate connected wood truss (MPCWT) is an engineered, prefabricated structural component designed for each specific application. MPCWT's used in residential floors are often installed with a 2x4 lumber "ribbon" at the ends of the trusses (see Figure 13B) to tie the ends of the trusses together. The ribbon board, by itself, is not intended to support the deck ledger and deck. Installing residential decks when the floor system for the house uses MPCWT requires a standard detail provided by the truss designer, a non-ledger deck, or a full plan submission. Refer to the Technical Note – *Attachment of Residential Deck Ledger to Metal Plate Connected Wood Truss Floor System* for special blocking details and attachment requirements (www.sbcindustry.com).

Figure 13A. Wood I-Joist Profile.

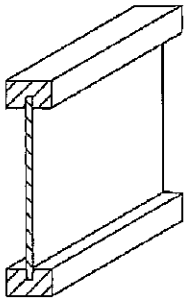

Figure 13B. Metal Plate Connected (MPC) Wood Floor Trusses with a 2x4 Lumber "Ribbon" at the Ends of the Trusses.

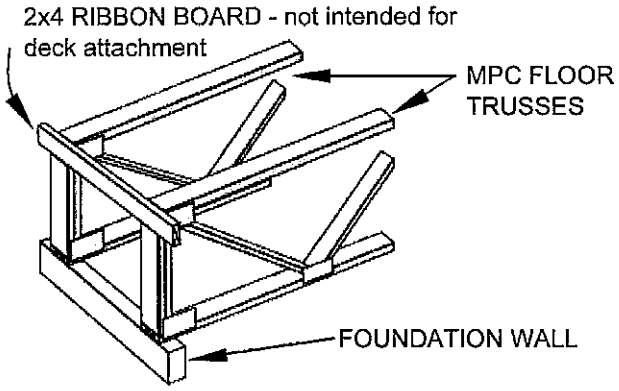

Figure 14. General Attachment of Ledger Board to Band Joist or Rim Joist.

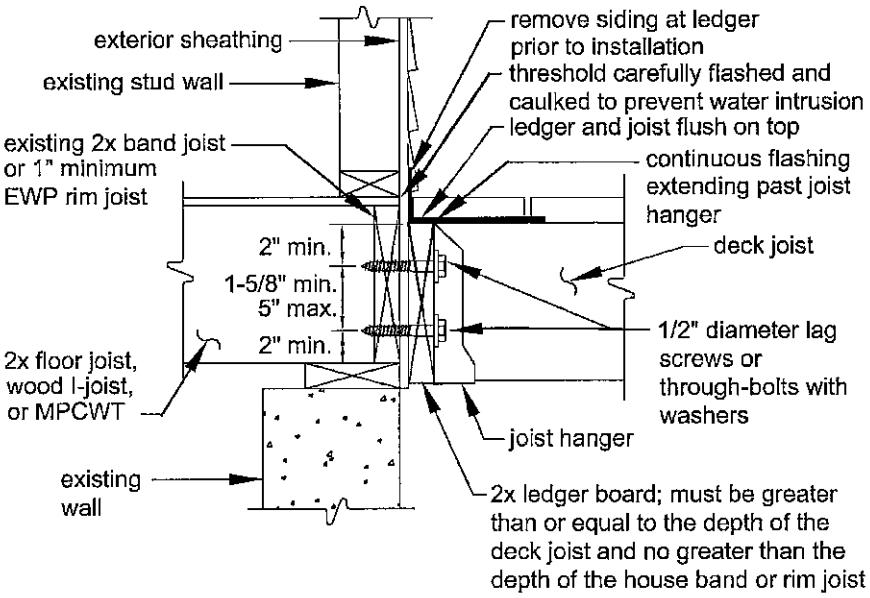

Figure 15. Attachment of Ledger Board to Foundation Wall (Concrete or Solid Masonry).

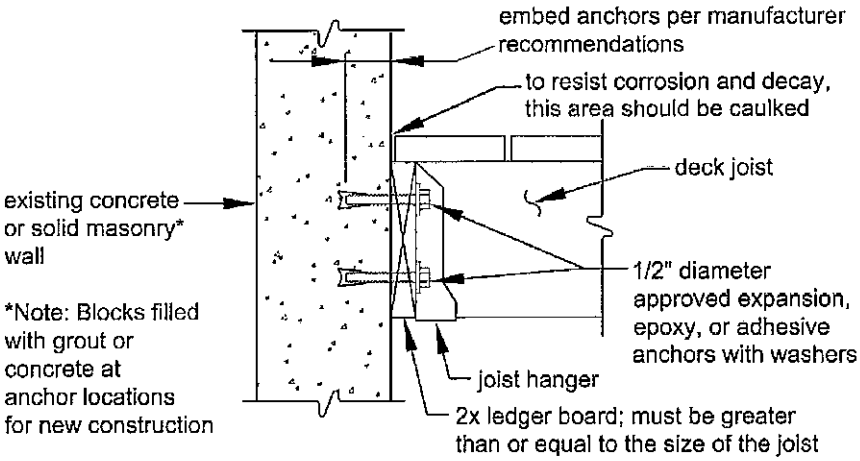

PROHIBITED LEDGER ATTACHMENTS

Attachments to exterior veneers (brick, masonry, stone), hollow masonry, and to cantilevered floor overhangs or bay windows are prohibited (see Figures 17 and 18). In such cases, the non-ledger deck is required (See NON-LEDGER DECKS).

Figure 17. No Attachment to or Through Exterior Veneers (Brick, Masonry, Stone).

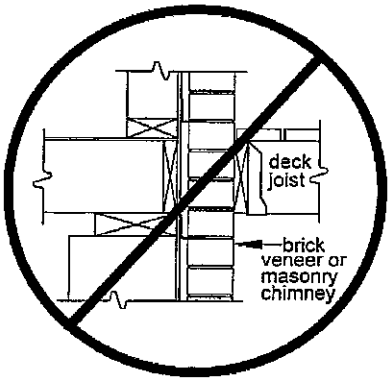

Figure 18. No Attachment to House Overhang with Ledger.

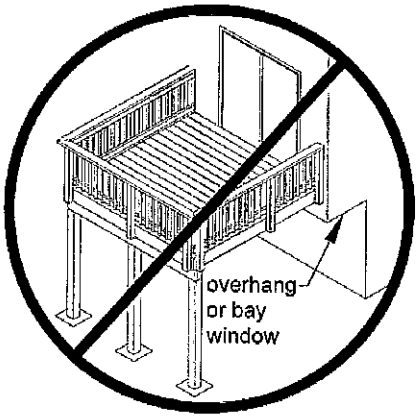

LEDGER BOARD FASTENERS

Only those fasteners noted below are permitted. LEAD ANCHORS ARE PROHIBITED.

Deck ledger connection to band joist or rim joist. The connection between a deck ledger and a 2-inch nominal lumber band joist (1-½" actual) or LVL rim joist bearing on a sill plate or wall plate shall be constructed with ½" lag screws or bolts with washers per Table 5 and Figure 19 (see MINIMUM REQUIREMENTS).

Table 5. Fastener Spacing for a Southern Pine, Douglas Fir-Larch, or Hem-Fir Deck Ledger or Band or Rim Joist and a 2-inch Nominal Solid-Sawn Spruce-Pine-Fir Band Joist or LVL Rim Joist.[3,4,5,6,8]
(Deck Live Load = 40 psf, Deck Dead Load = 10 psf)

		Joist Span						
	Rim Joist or Band Joist	6'-0" and less	6'-1" to 8'-0"	8'-1" to 10'-0"	10'-1" to 12'-0"	12'-1" to 14'-0"	14'-1" to 16'-0"	16'-1" to 18'-0"
Connection Details		On-Center Spacing of Fasteners						
½" diameter lag screw[1] with 15/32" maximum sheathing	1" LVL	24"	18"	14"	12"	10"	9"	8"
	1-1/8" LVL	28"	21"	16"	14"	12"	10"	9"
	1-½" Lumber	30"	23"	18"	15"	13"	11"	10"
½" diameter bolt with 15/32" maximum sheathing	1" LVL	24"	18"	14"	12"	10"	9"	8"
	1-1/8" LVL	28"	21"	16"	14"	12"	10"	9"
	1-½" Lumber	36"	36"	34"	29"	24"	21"	19"
½" diameter bolt with 15/32" maximum sheathing and ½" stacked washers[2,7]	1-½" Lumber	36"	36"	29"	24"	21"	18"	16"

1. The tip of the lag screw shall fully extend beyond the inside face of the band or rim joist.
2. The maximum gap between the face of the ledger board and face of the wall sheathing shall be ½".
3. Ledgers shall be flashed or caulked to prevent water from contacting the house band joist (see Figures 14 and 15).
4. Lag screws and bolts shall be staggered per Figure 19.
5. Deck ledgers shall be minimum 2x8 pressure-preservative-treated No.2 grade lumber, or other *approved* materials as established by standard engineering practice.
6. When solid-sawn pressure-preservative-treated deck ledgers are attached to engineered wood products (minimum 1" thick wood structural panel band joist or structural composite lumber including laminated veneer lumber), the ledger attachment shall be designed in accordance with accepted engineering practice. Tabulated values based on 300 lbs and 350 lbs for 1" and 1-1/8" LVL rim joist, respectively.
7. Wood structural panel sheathing, gypsum board sheathing, or foam sheathing shall be permitted between the band or rim joist and ledger. Stacked washers are permitted in combination with wood structural panel sheathing, but are not permitted in combination with gypsum board or foam sheathing. The maximum distance between the face of the ledger board and the face of the band joist shall be 1".
8. Fastener spacing also applies to Southern Pine, Douglas Fir-Larch, and Hem-Fir band or rim joists.

Placement of lag screws or bolts in deck ledgers
The lag screws or bolts shall be placed as shown in Figure 19. The lag screws or bolts shall be staggered from the top to the bottom along the horizontal run of the deck ledger (see Figure 19). Proper installation of lag screws or bolts shall be verified by the authority having jurisdiction.

Figure 19. Ledger Board Fastener Spacing and Clearances.

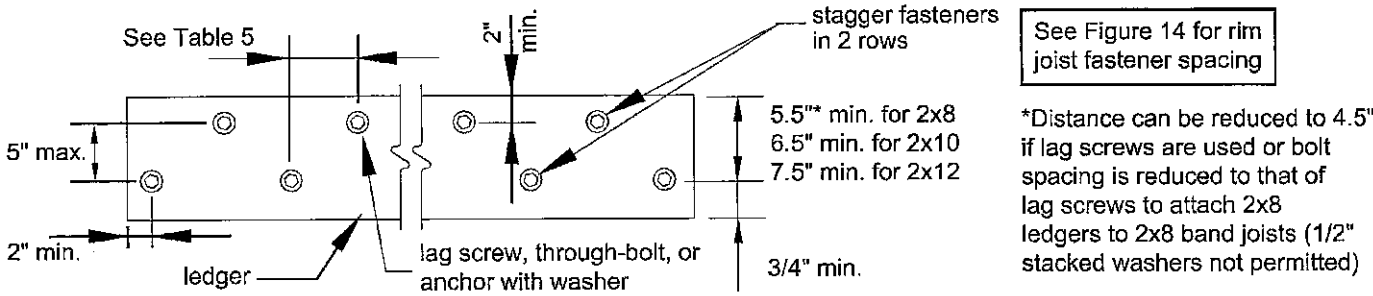

Through-Bolts
Through-bolts shall have a diameter of ½". Pilot holes for through-bolts shall be $^{17}/_{32}$" to $^{9}/_{16}$" in diameter. Through-bolts require washers at the bolt head and nut.

Expansion and Adhesive Anchors
Use *approved* expansion or adhesive anchors when attaching a ledger board to a concrete or solid masonry wall as shown in Figure 15. Expansion and adhesive anchor bolts shall have a diameter of ½". Minimum spacing and embedment length shall be per the manufacturer's recommendations. All anchors must have washers.

Lag Screws
Lag screws shall have a diameter of ½" (see MINIMUM REQUIREMENTS). Lag screws may be used only when the field conditions conform to those shown in Figure 14. See Figure 20 for lag screw length and shank requirements. All lag screws shall be installed with washers.

Figure 20. Lag Screw Requirements.

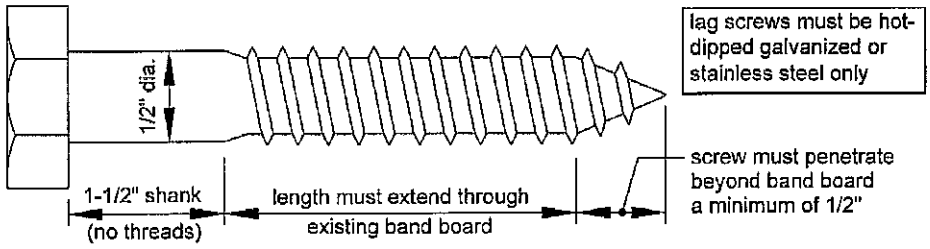

Lag screw installation requirements: Each lag screw shall have pilot holes drilled as follows: 1) Drill a ½" diameter hole in the ledger board, 2) Drill a $^{5}/_{16}$" diameter hole into the band board of the house. DO NOT DRILL A ½" DIAMETER HOLE INTO THE BAND JOIST.
The threaded portion of the lag screw shall be inserted into the pilot hole by turning. DO NOT DRIVE LAG SCREWS WITH A HAMMER. Use soap or a wood-compatible lubricant as required to facilitate tightening. Each lag screw shall be thoroughly tightened (snug but not over-tightened to avoid wood damage).

NON-LEDGER DECKS - FOR RESISTING VERTICAL LOADS

Non-ledger decks use the house for resisting lateral loads but do not utilize the exterior wall of the house to support vertical loads (see Figure 21). Rather than supporting the deck on a ledger, an additional beam with posts is provided at or within the lesser of L_O or L/4 of the house. THE ASSOCIATED DECK POST FOOTINGS SHALL BE PLACED AT THE SAME ELEVATION AS THE HOUSE FOOTING IF LOCATED CLOSER THAN 5'-0" TO A HOUSE WALL (see Figure 2 and Figure 12). For houses with basements, a cylindrical footing (caisson) is recommended to minimize required excavation at the basement wall. Beam size is determined by Table 3. Non-ledger decks shall be attached to the house per Table 5 and Figures 22 or 23 for lateral loads.

Figure 21. Non-Ledger Deck - For Resisting Vertical Loads.

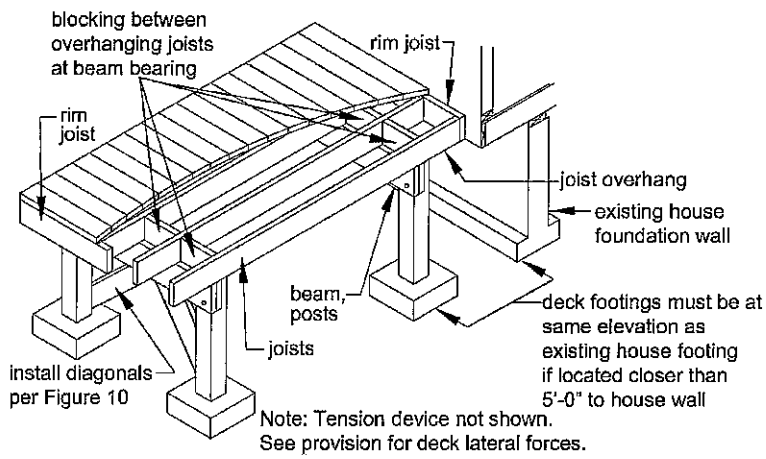

DECK LATERAL LOADS

Attachment to House: Decks shall be positively anchored to the primary structure [R507.1]. The lateral connection required shall be permitted to be in accordance with Figure 22 or 23 for ledger and non-ledger decks. Hold-down tension devices shall be provided in not less than two locations within two feet of the edge of the deck, and shall have an allowable stress design capacity of not less than 1,500 lb [R507.2.4].

The wall must be sheathed with minimum $^3/_8$" wood structural panel sheathing. Use lag screws or through-bolts when fastening to a band joist; use expansion anchors or epoxy anchors when fastening to concrete or masonry. DO NOT ATTACH TO BRICK VENEERS. VERIFY THIS CONDITION IN THE FIELD PRIOR TO UTILIZING THIS METHOD. Fasteners shall penetrate beyond the house band board and be installed per Table 5.

For non-ledger decks, blocking or framing angles can be used in lieu of joist hangers and shall be provided on each side of each joist. Blocking shall be installed with 5-10d threaded nails into the rim joist or the framing angle shall have a lateral capacity of 600 lb. Flashing over the rim joist is required and must be installed in accordance with the flashing provisions in the LEDGER ATTACHMENT REQUIREMENTS.

Figure 22. Lateral Load Device with Floor Joists Parallel to Deck Joists.

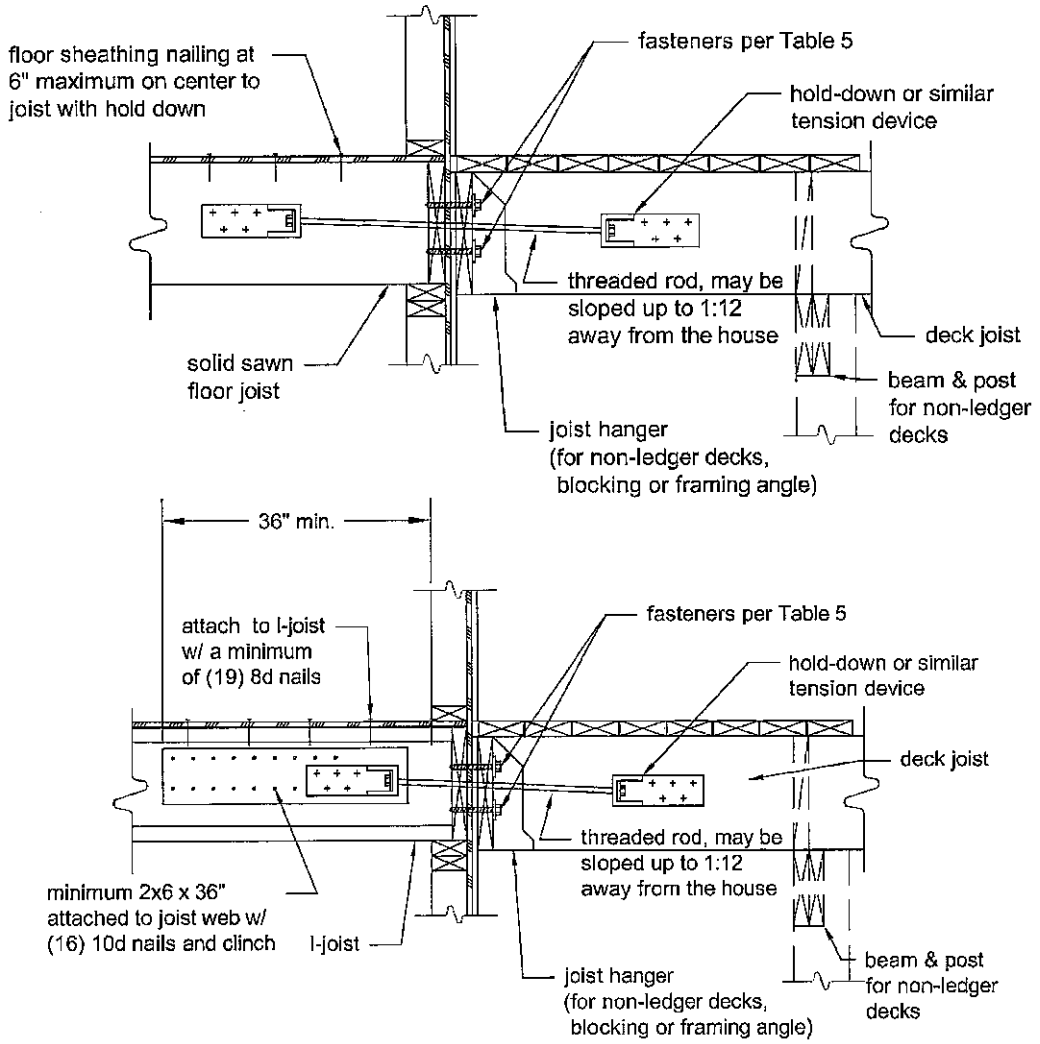

Figure 23. Lateral Load Device with Floor Joists Perpendicular to Deck Joists.

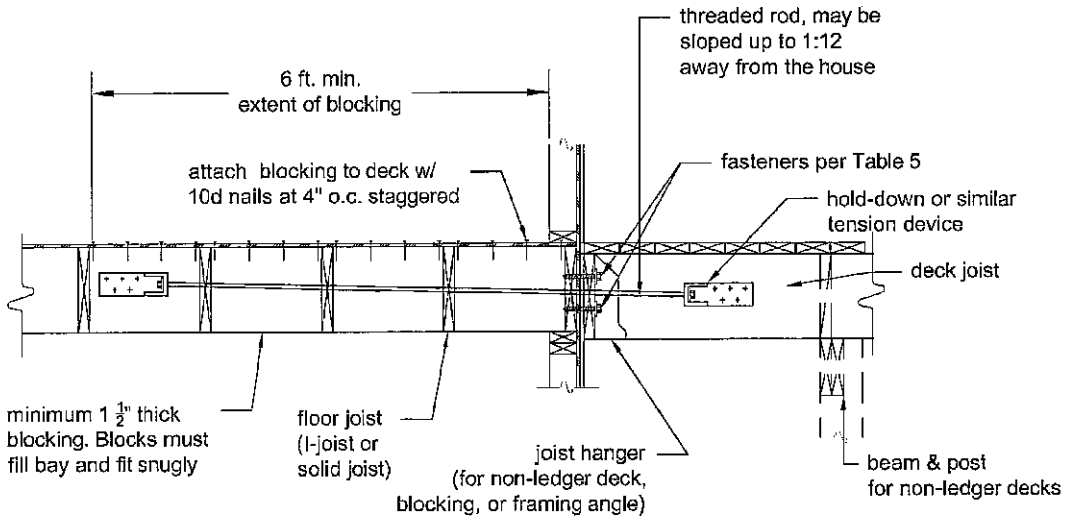

GUARD REQUIREMENTS

All decks greater than 30" above grade are required to have a guard [R312.1] - one example is shown in Figure 24. Other methods and materials may be used for guard construction when *approved* by the authority having jurisdiction.

Figure 24. Example Guard Detail.

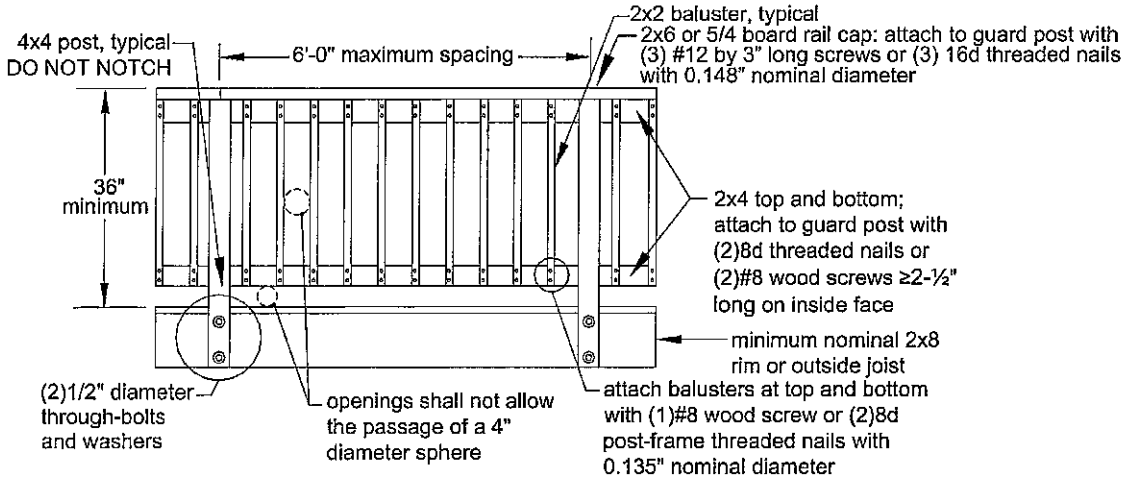

GUARD POST ATTACHMENTS FOR REQUIRED GUARDS

Deck guard posts for required guards shall be a minimum 4x4 (nominal) with an adjusted bending design value not less than 1,100 psi. Joists and rim joists to which guard posts are attached shall be a minimum of 2x8 (nominal).

Guard posts for required guards which run parallel to the deck joists shall be attached to the outside joist per Figure 25. Guard posts for required guards that run perpendicular to the deck joists shall be attached to the rim joist in accordance with Figure 26. Only hold-down anchor models meeting these minimum requirements shall be used. Hold-down anchors shall have a minimum allowable tension load of 1,800 pounds for a 36" maximum guard height and be installed in accordance with the manufacturer's instructions.

Figure 25. Guard Post to Outside-Joist Example.

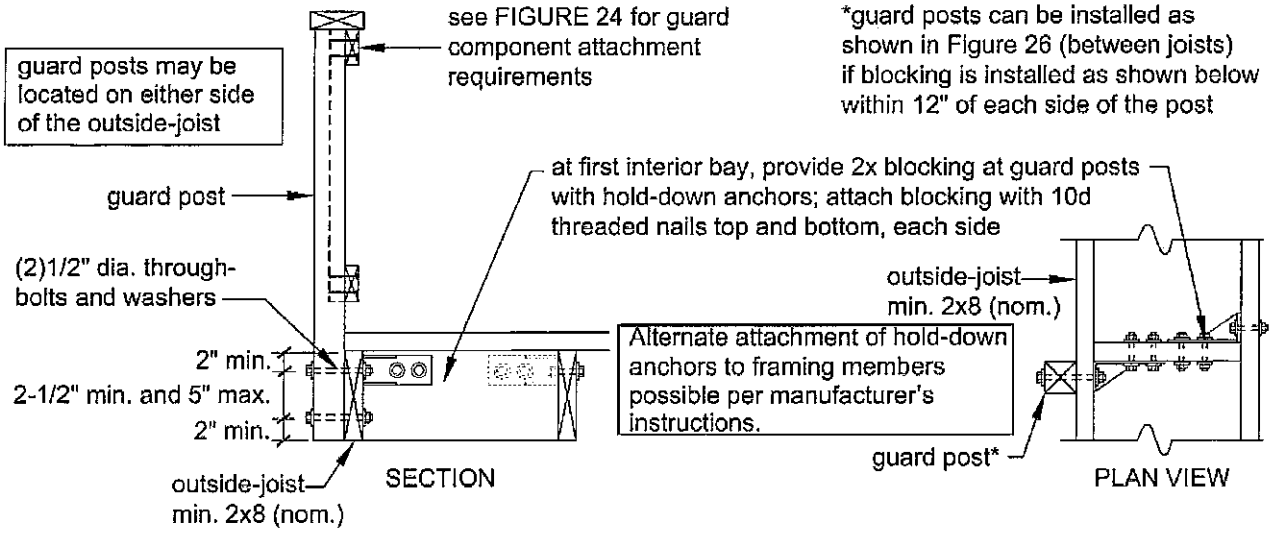

Figure 26. Guard Post to Rim Joist Example.

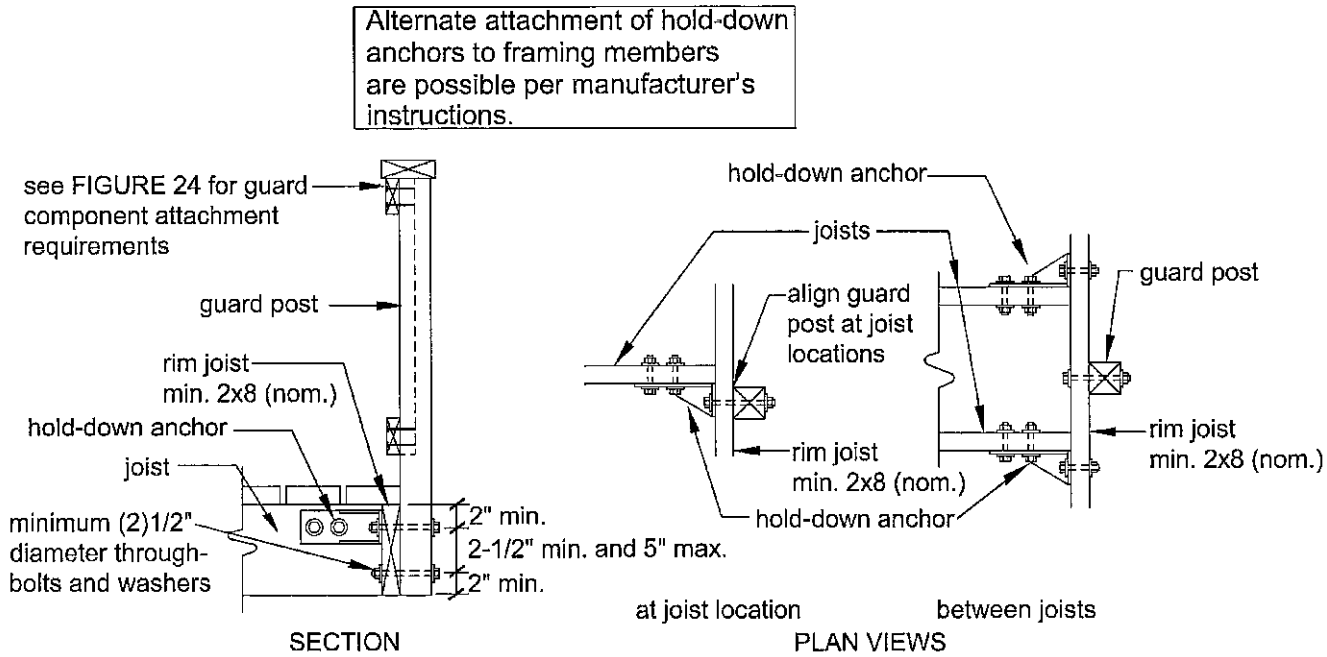

STAIR REQUIREMENTS

Stairs, stair stringers, and stair guards shall meet the requirements shown in Figure 27 through Figure 34 and Table 6 except where amended by the local jurisdiction. All stringers shall be a minimum of 2x12. Stair stringers shall not span more than the dimensions shown in Figure 28. If the stringer span exceeds these dimensions, then a 4x4 post may be provided to support the stringer and shorten its span length. The 4x4 post shall be notched and bolted to the stringer with (2) ½" diameter through-bolts with washers per Figure 8A. The post shall be centered on a 12" diameter or 10" square, 6" thick footing. The footing shall be constructed as shown in Figure 34 and attached to the post as shown in Figure 12. An intermediate landing may also be provided to shorten the stringer span (see provisions below). If the total vertical height of a stairway exceeds 12'-0", then an intermediate landing shall be required. All intermediate stair landings must be designed and constructed as a non-ledger deck using the details in this document. Stairs shall be a minimum of 36" in width as shown in Figure 33 [R311.7]. If only cut stringers are used, a minimum of three are required. For stairs greater than 36" in width, a combination of cut and solid stringers can be used, but shall be placed at a maximum spacing of 18" on center (see Figure 29). The width of each landing shall not be less than the width of the stairway served. Every rectangular landing shall have a minimum dimension of 36" measured in the direction of travel and no less than the width of the stairway served [R311.7].

Figure 27. Tread and Riser Detail.

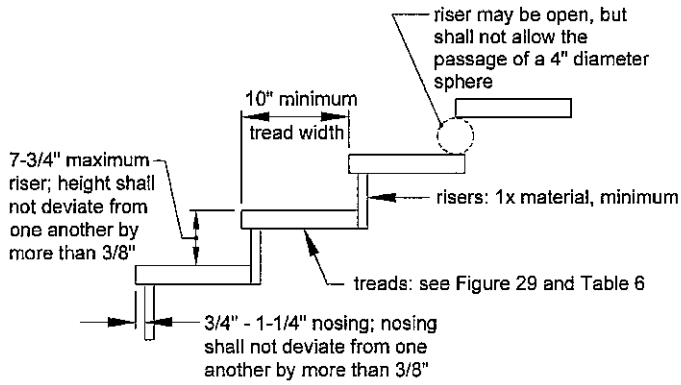

Figure 28. Stair Stringer Requirements.

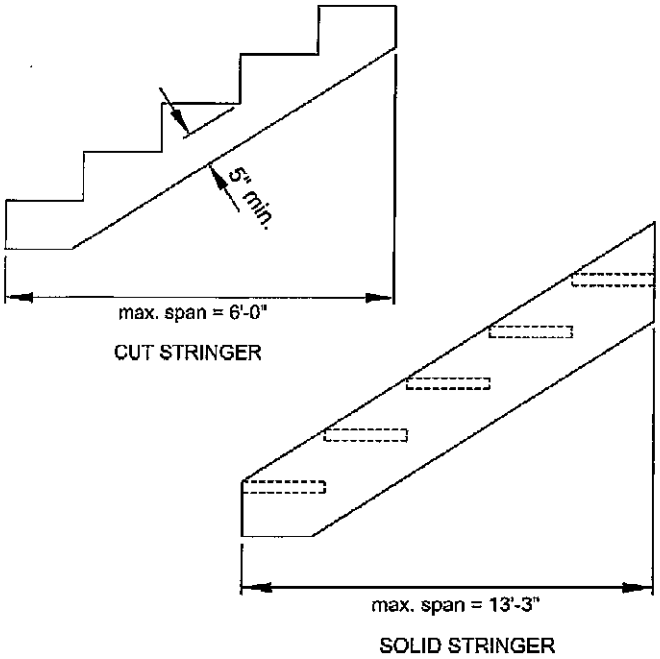

Figure 29. Tread Connection Requirements.

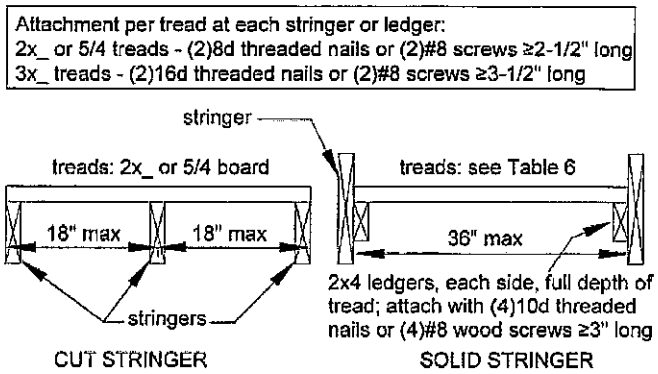

Figure 30. Stair Guard Requirements.

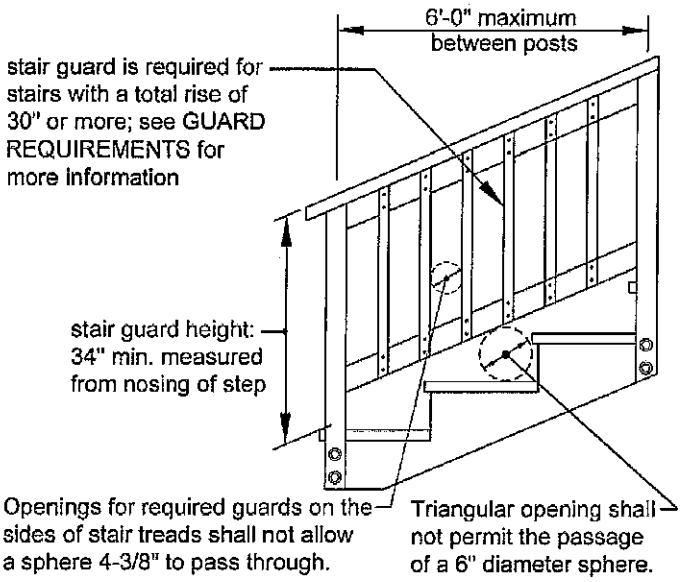

Figure 31. Stair Stringer Attachment Detail.

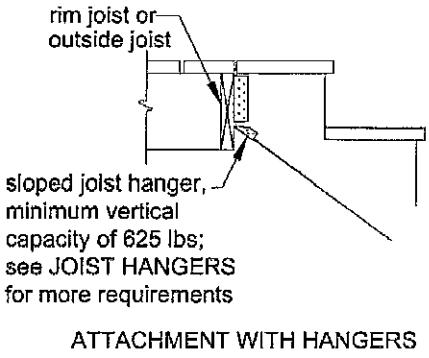

Table 6. Minimum Tread Size for Cut and Solid Stringers.[1]

Species	Cut Stringer	Solid Stringer
Southern Pine	2x4 or 5/4	2x8
Douglas Fir Larch, Hem-Fir, SPF[2]	2x4 or 5/4	2x8 or 3x4
Redwood, Western Cedars, Ponderosa Pine,[3] Red Pine[3]	2x4 or 5/4	2x10 or 3x4

1. Assumes 300 lb concentrated load, L/288 deflection limit, No. 2 stress grade, and wet service conditions.
2. Incising assumed for Douglas Fir-Larch, Hem-Fir, and Spruce-Pine-Fir.
3. Design values based on northern species with no incising assumed.

STAIR HANDRAIL REQUIREMENTS

All stairs with 4 or more risers shall have a handrail on at least one side (see Figure 32A) [R311.7.8]. The handrail height measured vertically from the sloped plane adjoining the tread nosing shall be not less than 34 inches and not more than 38 inches (see Figure 30) [R311.7.8.1]. Handrails shall be graspable and shall be composed of decay-resistant and/or corrosion resistant material. Handrails shall be Type I, Type II, or provide equivalent graspability (see Figure 32B). Type I shall have a perimeter dimension of at least 4" and not greater than 6-¼". Type II rails with a perimeter greater than 6-¼" shall provide a graspable finger recess area on both sides of the profile [R311.7.8.3]. All shapes shall have a smooth surface with no sharp corners. Handrails shall run continuously from a point directly over the lowest riser to a point directly over the highest riser and shall return to the guard at each end (see Figure 33). Handrails may be interrupted by guard posts at a turn in the stair [R311.7.8.2].

Figure 32A. Handrail Mounting Examples.

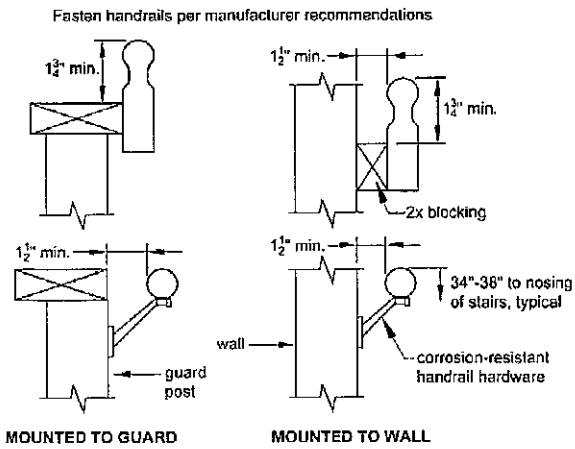

Figure 32B. Handrail Grip Size.

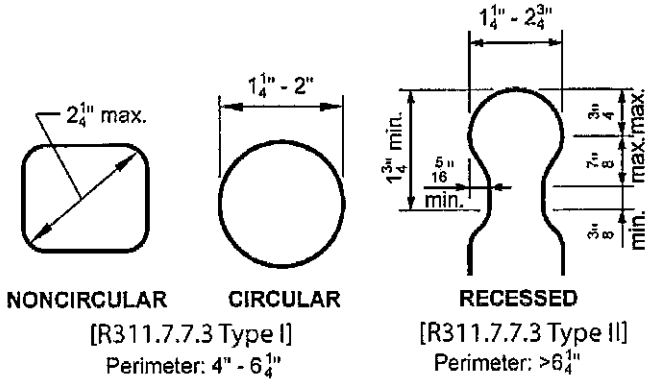

STAIR FOOTING REQUIREMENTS [R403]

Where the stairway meets grade, attach the stringers to the stair guard posts as shown in Figure 34. Posts shall bear on footings. All footings shall bear on solid ground and shall be placed at least 12 inches below the undisturbed ground surface or below the frost line, whichever is deeper (see Figure 34). Stringers shall bear on a 2x4 bearing block attached to the post as shown. Stringers shall not bear on new or existing concrete pads or patios that are not founded below this depth. When guards are not required (see GUARD REQUIREMENTS), posts may terminate below the bottom tread elevation. Bolts are only required if a guard post is required.

STAIR LIGHTING REQUIREMENTS [R303.7]

Stairways shall have a light source located at the top landing such that all stairs and landings are illuminated. The light switch shall be operated from inside the house. However, motion detected or timed switches are acceptable.

Figure 33. Miscellaneous Stair Requirements.

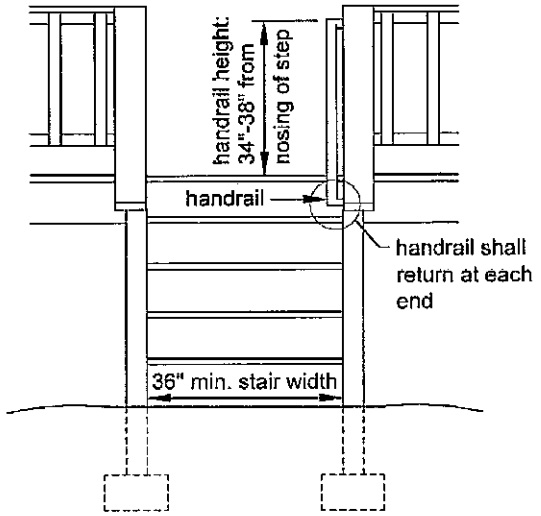

Figure 34. Stair Footing Detail.

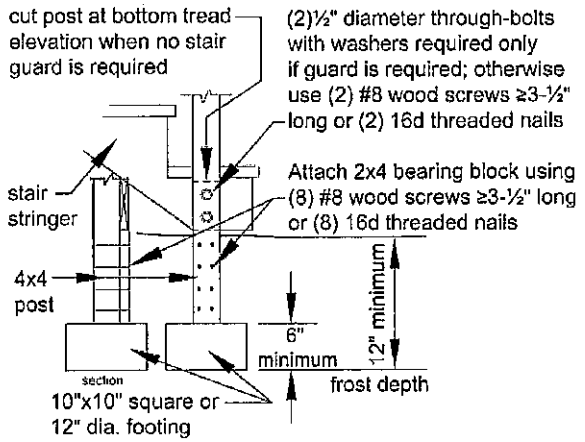

FRAMING AT CHIMNEY OR BAY WINDOW

All members at a chimney or bay window shall be framed in accordance with Figure 35. Headers may span a maximum of 6'-0". When a chimney or bay window is wider than 6'-0", one or more 6x6 posts may be added to reduce header spans to less than 6'-0". In such cases, the post footing must meet the requirements in the FOOTINGS section. Headers shall be located no more than 3'-0" from the end of the trimmer joist.

Triple trimmer joists are required on each side of the header if joist spacing is 12" or 16" o.c. or if the trimmer joist span exceeds 8'-6"; otherwise, double trimmer joists are permitted. Trimmer joists may bear on the beam and extend past the beam centerline up to the lesser of L_O or L/4 as shown in Figures 1A and 2, or the trimmer joist may attach to the side of the beam with joist hangers as shown in Figure 1B. Joist hangers shall each have a minimum vertical capacity in accordance with Table 7. Bolts, screws, or lag screws used to attach the hanger to the ledger shall fully extend through the ledger into the 2-inch nominal lumber band joist (1-½" actual) or LVL rim joist. Otherwise a non-ledger deck is required.

Table 7. Trimmer Joist Hanger Vertical Capacity.

Joist Size	Minimum Capacity, lbs
2x6	870
2x8	1155
2x10	1420
2x12	1575

Figure 35. Detail for Framing Around a Chimney or Bay Window.

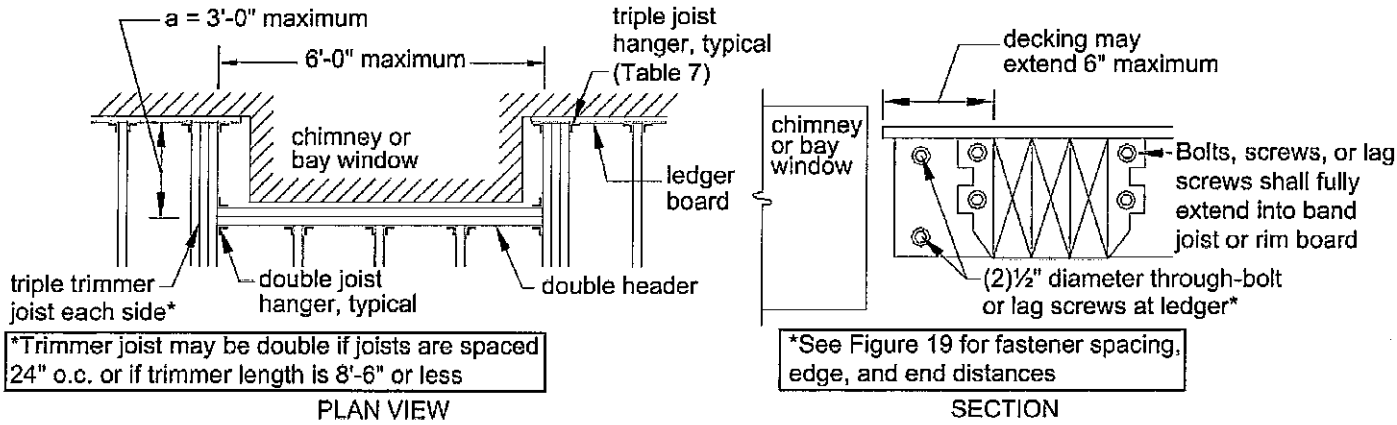

REFERENCES

2015 International Residential Code (IRC), International Code Council (ICC), Washington, DC, 2015.

ANSI/ASME Standard B18.2.1-2010, Square, Hex, Heavy Hex, and Askew Head Bolts and Hex, Heavy Hex, Hex Flange, Lobed Head, and Lag Screws (Inch Series), American Society of Mechanical Engineers, New York, NY, 2010.

ANSI/ASME Standard B18.6.1-1981 (Reaffirmed 1997), Wood Screws (Inch Series), American Society of Mechanical Engineers, New York, NY, 1982.

ASTM A 123-17, Specification for Zinc (Hot-Dip Galvanized) Coatings on Iron and Steel Products, ASTM, West Conshohocken, PA 2017.

ASTM Standard A 153-16a, Standard Specification for Zinc Coating (Hot-Dip) on Iron and Steel Hardware, ASTM, West Conshohocken, PA 2016.

ASTM A 653-17, Standard Specification for Steel Sheet, Zinc-Coated (Galvanized) or Zinc-Iron Alloy-Coated (Galvannealed) by the Hot-Dip Process, ASTM, West Conshohocken, PA 2017.

ASTM Standard B 695-04, Standard Specification for Coatings of Zinc Mechanically Deposited on Iron and Steel, ASTM, West Conshohocken, PA 2016.

ASTM F 1667-17, Standard Specification for Driven Fasteners: Nails, Spikes, and Staples, ASTM, West Conshohocken, PA 2017.

Attachment of Residential Deck Ledger to Metal Plate Connected Wood Truss Floor System, Structural Building Components Association (SBCA), www.sbcindustry.com, 2015.

AWPA Book of Standards, American Wood Protection Association, Birmingham, AL, 2017.

Policy for Evaluation of Recommended Spans for Span Rated Decking Products, American Lumber Standard Committee, Germantown, MD 2004.

INTERNATIONAL CODE COUNCIL®

AMERICAN WOOD COUNCIL

COUNTY OF FAIRFAX 1742 VIRGINIA

It is intended that this document be used in conjunction with competent design, accurate fabrication, and adequate supervision of construction. While every effort has been made to insure the accuracy of the information presented, the American Wood Council and its members do not assume responsibility for errors or omissions in the document, nor for designs, plans, or construction prepared from it. Those using this document assume all liability arising from its use.

Copyright © 2007, 2009, 2010, 2014, 2015, 2018
American Wood Council

04-18

Design for Code Acceptance 6

Appendix A to *Prescriptive Residential Wood Deck Construction Guide* *DCA 6*

SAFETY GLAZING REQUIREMENTS: *IRC* R308.4 states that safety glazing in window glass is required when the existing house wall acts as a barrier to adjacent stairs, landings, and areas at the top and bottom of stairs. If a window or portion thereof falls within the area shown in Figure A1, glass panes within that area should be safety glazed. Safety glazing should reduce injury due to accidental impact when ascending or descending stairs. Application of safety glazing film to glass that was not originally treated is acceptable to meet this requirement.

Exceptions to this requirement include:

- When a protective bar is installed on the accessible side(s) of the glazing 36" ± 2" above the deck surface. The bar shall be capable of withstanding a horizontal load of 50 plf without contacting the glass and be a minimum of 1-½" in height.
- The side of a stairway, landing, or ramp has a guardrail or handrail, including balusters or in-fill panels, complying with the provisions of Sections R311.7.8 and R312 and the plane of the glass is more than 18" from the railing.
- When a solid wall or panel extends from the plane of the adjacent walking surface to 34" - 36" above the floor and the construction at the top of that wall or panel is capable of withstanding the same horizontal load as the protective bar.

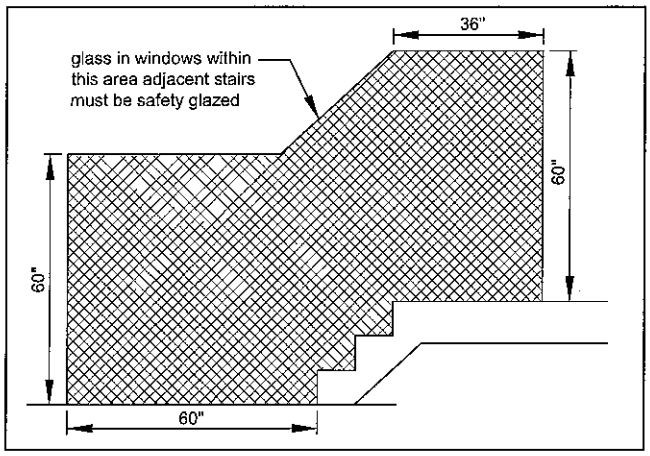

Figure A1. Safety glazing requirements.

Design for Code Acceptance 6

Appendix B to *Prescriptive Residential Wood Deck Construction Guide DCA 6*

This *Appendix* to *DCA 6 – Prescriptive Residential Wood Deck Construction Guide* has been requested by builders, building officials, and others, to provide an alternative to the assumptions of Table 4 Post Height for 6x6 and Footings Sizes for all Posts. *DCA 6* is written to be as simple and easy to use as possible; however, this means that conservative assumptions often have to be made. This is especially true for Table 4, which assumes full cantilevers on both the joist and the beam. If full cantilevers are not present, the load will be less than assumed in Table 4, and the footing size will often decrease and allowable post height will often increase. This Appendix is an aid to calculating the loads on posts and footings based on the actual deck configuration.

Tributary Area

Since uniform loading is prescriptively set for *DCA 6*, only the area the post or footing is supporting needs to be determined. This is called the tributary area and is shown in Figure B1.Tributary area of a center or corner post can be found from Figure B1 or by using the following formulas:

$$A_{CenterPost} = (\frac{1}{2}J_L + J_O)(B_L) \qquad \text{Eq. B-1}$$

$$A_{CornerPost} = (\frac{1}{2}J_L + J_O)(\frac{1}{2}B_L + B_O) \qquad \text{Eq. B-2}$$

Where:

A is tributary area (ft^2)
J_L is length of joist (ft)
J_O is length of joist overhang (ft)
B_L is the length of the beam span (ft)
B_O is the length of the beam overhang (ft)

Figure B1. Examples of Tributary Areas

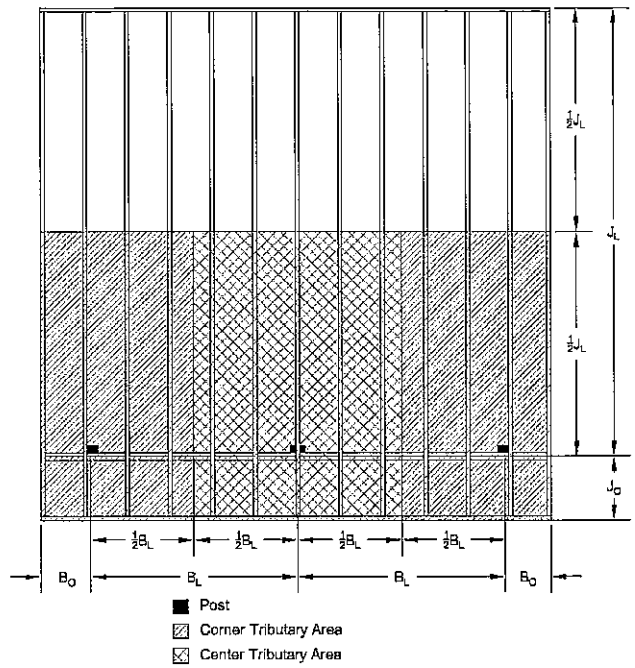

Joist Length, J_L

The joist length is defined differently for this appendix than the main provisions of *DCA 6*. The joist length is not the design span of the joist, but is from the ledger face to either the center point of the beam, if there is an overhang, or to the outside face of the rimboard if there is not an overhang. See Figure B2.

Joist Overhang Length, J_O

The length of the joist overhang is measure from the outside edge of the deck to the centerline of the beam. See Figure B2. If no overhang exists, zero is entered into equation B-1 or B-2 for J_O.

Figure B2. Joist Length and Overhang

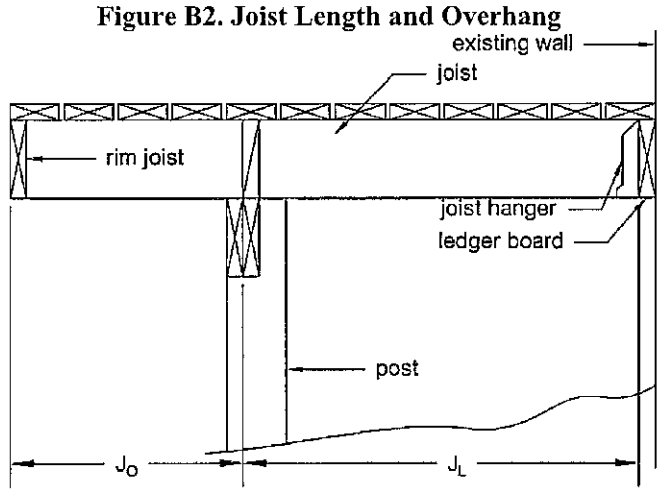

Beam Span Length, B_L
The beam span is measured from either centerline of post to centerline of post, if there are overhangs, or to the outside edges of the deck, if there are no overhangs. For posts or footings being considered with two unequal, adjacent beam spans, the greater span shall be used. See Figure B3.

Beam Overhang Length, B_O
The length of the beam overhang is measured from the outside edge of the deck to the centerline of the nearest post. See Figure B3. If a center post or footing is being considered or no overhang exists, zero is entered into the equation B-1 or B-2 for B_O.

Figure B3. Beam Span and Overhang Length

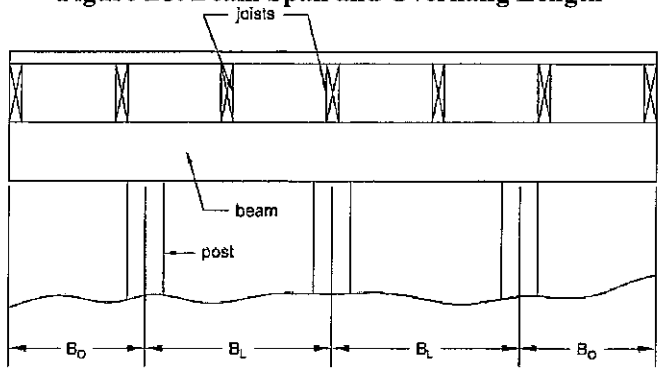

Post and Footings Size
As an alternative to Table 4 of *DCA 6*, the post height and footing size may be in accordance with Table B1 through B3.

Table B1. Post Heights Based[1,3] on Tributary Area for Corner Posts.

	6x6 Post Height (ft.)					4x4 Post Height (ft.)				
Tributary Area (sq. ft.)	Southern Pine	Douglas Fir-Larch[2]	Hem-Fir[2], Western Cedars	Redwood	Ponderosa Pine, Red Pine, SPF[2]	Southern Pine	Douglas Fir-Larch[2]	Hem-Fir[2], Western Cedars	Redwood	Ponderosa Pine, Red Pine, SPF[2]
10	14	14	14	14	14	9	7	7	11	8
20	14	14	14	14	14	6	4	5	7	5
30	14	14	14	14	14	5	3	4	6	4
40	14	14	14	14	14	4	3	3	5	3
50	14	14	14	14	14	4	2	3	4	3
60	14	14	14	14	14	3	2	2	4	2
70	14	14	14	14	13	3	2	2	3	2
80	14	14	13	14	12	2	2	2	3	2
90	14	14	12	14	10	2	2	2	2	2
100	14	14	11	13	9	2	2	2	2	2
110	14	13	10	12	7	2	2	2	2	2
120	13	12	10	12	6	2	2	2	2	2
130	13	11	9	11	4	2	2	2	2	2
140	12	11	8	10	2	2	2	2	2	2
150	11	10	7	10	2	2	2	2	2	2
160	11	9	6	9	2	2	2	2	2	2
170	10	9	5	9	NP	2	2	2	2	2
180	10	8	3	9	NP	2	2	2	2	2
190	10	7	2	8	NP	2	2	2	2	2
200	8	7	2	8	NP	2	2	2	2	2
210	8	6	2	7	NP	2	2	2	2	2
220	7	5	2	7	NP	2	2	2	2	2
230	6	4	2	7	NP	2	2	2	2	2
240	6	2	2	6	NP	2	2	NP	2	2
250	5	2	2	6	NP	2	2	NP	NP	NP

1. Assumes No 2. Stress grade and wet service conditions.
2. Incising assumed for Douglas fir-larch, hem-fir, and spruce-pine-fir.
3. Some post heights for 4x4 post sizes show a greater load carrying capacity than 6x6 post sizes since different ASTM Standards are used to develop design values for visually graded dimension lumber vs. visually graded timbers.

Table B2. Post Heights Based[1,3] on Tributary Area for Center Posts.

	6x6 Post Height (ft.)					4x4 Post Height (ft.)				
Tributary Area[4] (sq. ft.)	Southern Pine	Douglas Fir-Larch[2]	Hem-Fir[2], Western Cedars	Redwood	Ponderosa Pine, Red Pine, SPF[2]	Southern Pine	Douglas Fir-Larch[2]	Hem-Fir[2], Western Cedars	Redwood	Ponderosa Pine, Red Pine, SPF[2]
10	14	14	14	14	14	14	14	14	14	14
20	14	14	14	14	14	14	14	14	14	14
30	14	14	14	14	14	14	14	13	13	14
40	14	14	14	14	14	13	14	11	11	12
50	14	14	14	14	14	11	12	10	10	10
60	14	14	14	14	14	10	11	10	9	10
70	14	14	14	14	14	9	10	9	8	9
80	14	14	14	14	14	9	9	8	7	8
90	14	14	14	14	14	8	9	7	7	7
100	14	14	14	14	14	8	8	7	7	7
110	14	14	14	14	14	7	8	6	6	6
120	14	14	14	14	14	7	7	6	6	6
130	14	14	14	14	13	6	7	5	6	6
140	14	14	13	14	11	6	7	5	5	5
150	14	14	13	14	10	6	6	5	5	5
160	14	14	12	13	8	6	6	5	5	5
170	14	14	11	13	6	5	6	4	4	5
180	14	14	11	12	NP	5	6	4	4	4
190	13	13	11	12	NP	5	5	4	4	4
200	13	13	10	11	NP	4	5	3	4	4
210	12	12	8	11	NP	4	5	3	3	3
220	12	11	8	10	NP	4	5	2	3	3
230	11	11	7	10	NP	4	4	2	3	2
240	10	10	6	10	NP	3	4	NP	2	2
250	10	10	5	9	NP	3	4	NP	1	NP

1. Assumes No 2. Stress grade and wet service conditions.
2. Incising assumed for Douglas fir-larch, hem-fir, and spruce-pine-fir.
3. Some post heights for 4x4 post sizes show a greater load carrying capacity than 6x6 post sizes since different ASTM Standards are used to develop design values for visually graded dimension lumber vs. visually graded timbers.
4. Tributary area shall be multiplied by 1.25 at center posts with beams not spliced (continuous).

Table B3. Footing Sizes[1] Based on Tributary Area for Various Soil Capacities.

	Soil Bearing Capacity											
	1500 psf			2000 psf			2500 psf			3000 psf		
Tributary Area[2] (sq. ft.)	Round Footing Diameter (in.)	Square Footing (in.)	Footing Thickness (in.)	Round Footing Diameter (in.)	Square Footing (in.)	Footing Thickness (in.)	Round Footing Diameter (in.)	Square Footing (in.)	Footing Thickness (in.)	Round Footing Diameter (in.)	Square Footing (in.)	Footing Thickness (in.)
10	8	7	6	7	7	6	7	6	6	6	5	6
20	12	10	6	10	9	6	9	8	6	8	7	6
30	14	13	6	12	11	6	11	10	6	10	9	6
40	16	15	6	14	13	6	13	11	6	12	10	6
50	18	16	7	16	14	6	14	13	6	13	12	6
60	20	18	8	17	15	6	16	14	6	14	13	6
70	22	19	9	19	17	7	17	15	6	15	14	6
80	23	21	9	20	18	8	18	16	7	16	15	6
90	25	22	10	21	19	8	19	17	7	17	15	6
100	26	23	11	23	20	9	20	18	8	18	16	7
110	28	25	12	24	21	10	21	19	8	19	17	7
120	29	26	12	25	22	10	22	19	9	20	18	8
130	30	27	13	26	23	11	23	20	9	21	18	8
140	31	28	13	27	24	11	24	21	10	22	19	9
150	33	29	14	28	25	12	25	22	10	22	20	9
160	34	30	15	29	25	12	25	23	10	23	20	9
170	35	31	15	30	26	13	26	23	11	24	21	10
180	36	32	16	30	27	13	27	24	11	24	22	10
190	37	33	16	31	28	13	28	25	12	25	22	10
200	38	34	17	32	29	14	28	25	12	26	23	11
210	39	35	17	33	29	14	29	26	12	26	23	11
220	40	35	18	34	30	15	30	26	13	27	24	11
230	41	36	18	35	31	15	31	27	13	28	25	12
240	42	37	19	35	31	15	31	28	13	28	25	12
250	43	38	19	36	32	16	32	28	14	29	26	12

1. Assumes 40 psf live load, 10 psf dead load, 150 pcf concrete and 2,500 psi compressive strength of concrete. Coordinate footing thickness with post base and anchor requirements.
2. Tributary area shall be multiplied by 1.25 at center posts with beams not spliced (continuous).

Commentary to *Prescriptive Residential Wood Deck Construction Guide DCA 6*

Design for Code Acceptance 6

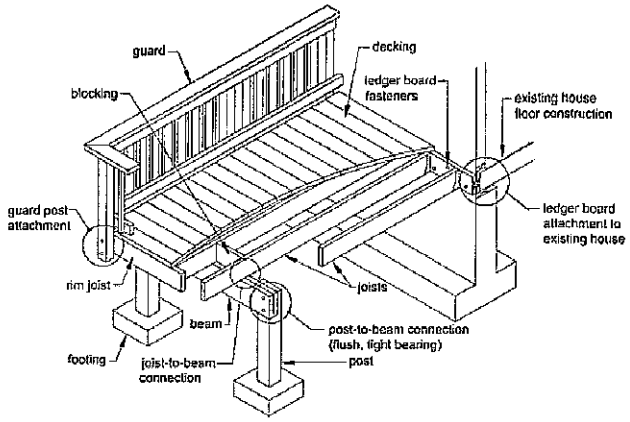

Foreword

This *Commentary* to *DCA 6 – Prescriptive Residential Wood Deck Construction Guide* has been requested by builders, building officials, and others, to provide background information and example calculations for various sections and tables of *DCA 6*.

The *DCA 6 Commentary* follows the same organization as *DCA 6*. Discussion of a particular provision in *DCA 6* is found in the *DCA 6 Commentary* by locating the same section or subsection found in *DCA 6*. Not every section of *DCA 6* has a corresponding commentary section. The *DCA 6 Commentary* provides background information intended to give the reader an understanding of the data and/or experience upon which the provision is based. One or more examples of the calculation procedures used to produce several of the tables are given to illustrate the scope of conditions covered by the table.

The provisions of *DCA 6* come primarily from the International Code Council's (ICC) *International Residential Code (IRC)*. In developing the *DCA 6 Commentary*, data available from laboratory tests and experience with structures in-service was analyzed and evaluated for the purpose of providing a consistent explanation. It is intended that this document be used in conjunction with competent design, accurate fabrication, and adequate supervision of construction. Therefore, the American Wood Council (AWC) does not assume any responsibility for errors or omissions in the *DCA 6 Commentary*, nor for designs or plans prepared from it.

Inquiries, comments, and suggestions from readers of this document are invited.

American Wood Council

Background

In August 2006, AWC, then part of the American Forest & Paper Association, formed an ad-hoc task group to address prescriptive provisions for residential wood deck construction. Representatives of the wood products industry, home builders, connector manufacturers, building officials, and truss industry were represented on the task group.

The task group was assigned to review existing information to determine if there was something on which to build. One resource reviewed was a document developed by the Fairfax County, Virginia Department of Public Works and Environmental Services titled *Typical Deck Details*. With Fairfax County's permission, this became the basis for *DCA 6*.

Since Fairfax County's *Typical Deck Details* was developed for a specific geographic location, *DCA 6* was expanded to apply on a national basis (e.g. addition of western lumber species). The first version of *DCA 6* was posted to the AWC website in October 2007.

At the end of 2013 and into 2014, the task group was formed again to update *DCA 6* to be in compliance with the *2012 IRC*. *DCA6-12* was posted on the AWC website in June 2014. *DCA6* was updated based on the *2015 IRC* and was posted in April 2018.

Copyright © 2018 American Wood Council

Basis
As stated in the boxed text on the cover of *DCA 6*, provisions and details are based on the International Code Council's *International Residential Code*. The original version of *DCA 6* was based on the *2006 IRC*. The current version of *DCA 6* is based on the *2015 IRC*.

Alternative Methods and Materials
A key point for users is the statement: "This document is not intended to preclude the use of alternative methods and materials." Further, *IRC* R104.11 states: "An alternative material, design or method of construction shall be approved where the building official finds that the proposed design is satisfactory and complies with the intent of the provisions of this code, and that the material, method or work offered is, for the purpose intended, at least the equivalent of that prescribed in this code." While AWC develops design tools and guidelines for wood construction, it is recognized that decks are built with materials other than wood. Many of these materials undergo scrutiny through a code evaluation process such as that promulgated by ICC's Evaluation Services. Typically, the result is an Evaluation Service Report (ESR) for the product. The building official is usually the authority having jurisdiction and makes the final decision regarding all construction methods and materials.

MINIMUM REQUIREMENTS and LIMITATIONS

1. This document applies to single level residential wood decks only. Multiple level decks will likely have stairs that create additional concentrated loads that are not considered in the joist and beam span tables for *DCA 6*. Non-residential decks or balconies typically require design by a licensed professional. All decks prescribed in *DCA 6* use the primary structure to resist lateral forces per Section R507.2.4 of the *IRC*.

2. This ratio is limited to 1:1, similar to open-front structures defined in *Special Design Provisions for Wind and Seismic* (SDPWS). Decks covered in this document are assumed to be diaphragms that cantilever from the house and are limited to a deck length-to-width ratio of 1:1. Larger aspect ratios may be permitted where calculations show that larger diaphragm deflections can be tolerated. See Deck Framing Plan.

3. *DCA 6* provides 6x6 nominal posts as the primary prescriptive solution with the alternative to substitute 8x8 posts. In some instances, this commentary provides a 4x4 nominal post alternative. See commentary regarding Table 4.

4. Table 1 does not provide an exhaustive list of preservative treatments for ground contact lumber. The American Wood Protection Association (AWPA) promulgates voluntary wood preservation standards. AWPA Standards are developed by its technical committees under an ANSI accredited consensus-based process. Note also that many preservative treatments undergo scrutiny through a code evaluation process such as that promulgated by ICC's Evaluation Services. Typically, the result is an Evaluation Service Report (ESR) for the product.

5. Smooth shank nails are prone to "backing out" of wood due to moisture cycling. Deformed-shank nails include helical (spiral) and annular (ring-shank) nails as defined in *ASTM F 547*. Including the common terms "spiral" and "ring-shank" is important to ensure availability from lumber yards. Reference design values for post-frame ring shank nails in accordance with *ASTM F1667* are provided in the *2015 National Design Specification® (NDS®) for Wood Construction*.

6. *NDS* Chapter 11 contains spacing, end, and edge distance requirements for various fasteners, including bolts and lag screws.

7. When subjected to standardized laboratory tests that accelerate the corrosion process, metal connectors and fasteners exposed to the chemicals used in certain preservative treatments exhibit high rates of corrosion. Users should rigorously apply recommendations of the chemical manufacturers and the treating industry – to use corrosion resistant fasteners and connectors or zinc coated (galvanized) fasteners and connectors with corrosion protection at least equivalent to that of hot-dip galvanized products. Additional information is available from various sources including:
http://awc.org/faqs/general/where-can-i-find-information-about-corrosion-of-fasteners

FEMA TB8-96, *Technical Bulletin 8, Corrosion Protection of Metal Connectors in Coastal Areas*, recommends that stainless steel fasteners be used in areas exposed to salt water.

8. Concentrated loads, such as those created by hot tubs, stairs, and planters, are beyond the scope of *DCA 6*.

9. Structural members and connections shown in *DCA 6* have been sized based primarily on a uniformly distributed floor live load of 40 psf and a dead load of 10 psf (table footnotes specify where other point loads have been considered). If a deck is not prone to sliding or

drifting snow, the criteria in *DCA 6* can be conservatively applied to a deck with a uniformly distributed snow load of 40 psf and a 10 psf dead load.

10. Section R507.1 of the *IRC* states that decks shall be designed to resist lateral loads and that the design is permitted to be per IRC Section 507.2.4. The *IRC* currently does not state the design lateral loads for decks, but it does provide an approved design, which *DCA 6* incorporates.

11. *IRC* R703.4(5) requires attachment of flashing "...Where exterior porches, decks, or stairs attach to a wall or floor assembly of wood-frame construction." Aluminum flashing should not be used if it will be in contact with treated lumber. Lumber treated with certain preservatives contain copper and will corrode aluminum flashing as well as ferrous metals.

12. *IRC* R110.1 Use and occupancy states: "A building or structure shall not be used or occupied...until the building official has issued a certificate of occupancy..."

13. See Commentary for **Alternative Methods and Materials**.

DECKING REQUIREMENTS

The American Lumber Standard Committee (ALSC) *Policy for Evaluation of Recommended Spans for Span Rated Decking Products* (ALSC Decking Policy) provides a uniform method for assessing span-rated decking products which are produced from many different species of wood, and graded under several different grading standards. This ALSC policy covers specific products classified by size of decking and are assigned a recommended span of usually 16" or 24". This policy is not intended to be used for the assessment or approval of decking spans in excess of 24". The range of current grading rule specifications and species requires the establishment of a uniform common analytical procedure for assessing the appropriateness of these products relative to the recommended spans. This ALSC policy establishes this uniform analytical procedure.

The analysis for maximum span rating assumes the following design conditions:

1. Span – Two-span continuous with load applied to only one span.
2. Seasoning – Green use condition assumed to be greater than 19%MC.
3. Deflection Limit – Deflection under design loads using calculated average allowable modulus of elasticity shall not exceed L/180.

Load Conditions – Allowable span analysis includes the following two load conditions with load applied on one span of a two-span continuous beam:

a. Uniform Load – the calculated maximum allowable fiber stress in bending derived from *ASTM D2555* and *D245*, or the In-grade test procedures of ALSC Decking Policy, Annex 1 equals or exceeds the stress induced by a 70 psf uniform load on the recommended span. The analysis assumes normal load duration.
b. Point Load – the calculated maximum allowable fiber stress in bending derived from *ASTM D2555* and *D245*, or the In-grade test procedures of ALSC Decking Policy, Annex 1 equals or exceeds the stress induced by a 220 pound point load applied at the midpoint of one span. The analysis assumes 7-day load duration.

See Commentary for **Alternative Methods and Materials** for decking materials not covered by the ALSC policy. In addition, alternate decking materials and/or use of alternate methods of fastening decking to joists has a critical impact on the resistance of lateral loads. Equivalent strength and stiffness developed by alternative materials and fastening methods is important to ensure adequate lateral capacity.

JOIST SIZE

Span calculations in Table 2 assume a 40 psf live load, 10 psf dead load, L/360 deflection limit for simple spans, No. 2 grade lumber, and wet service conditions. Overhang (cantilevers) calculations assume L/180 cantilever deflection with a 220 lbs point load (same as used for span rated decking), No. 2 grade lumber, and wet service conditions.

The format of Table 2 changed for *DCA 6-15*. An allowable simple span is given, and then an allowable overhang for that span is calculated. The calculated allowable overhang is limited by the governing bending moment, deflection caused by the 220 lbs point load, or by a maximum cantilever span of one fourth of the back span (L/4). The 220 lbs point load always produces a larger moment and deflection than the uniform load. See Table C2 which indicates where deflection controls

overhang length. The new format was adopted in the *2018 IRC*, so spans shown in *DCA 6-15* are slightly different than 2015 earlier versions of the *IRC*.

Joist spans are based on lumber size and joist spacing. The span of a joist is measured from the face of bearing at one end of the joist to the face of bearing at the other end of the joist and does not include the length of the overhangs. This method of measuring the "clear" span is for ease of construction and is commonly used by builders; however, it differs from standard engineering practice, where span is defined as the distance between centers of required bearing, as in the *2015 NDS*. To align the two differing definitions, 3" was subtracted from each allowable span in Table 2 to account for the difference between tabulating clear span and engineered span.

Joist spans are limited to a maximum of 18'-0" to ensure appropriate design of beams and footings. If longer joist spans are designed, joist hangers, beams, posts, and footings will have to be analyzed to ensure appropriate load path. See the span calculator at www.awc.org for simple span conditions without overhangs, however spans shall not exceed 18'-0" when used in conjunction with *DCA 6*.

Joist spans can cantilever past the joist bearing centerline up to L_O or L/4 as shown in Figure 1A and Figure 2, or the joists may attach to only one side of the beam with joist hangers as shown in Figures 1B. *DCA 6* beam, column, and footing tables assume that joists are only framed from one side of the beam, so allowing joists to span from opposite sides of the beam without appropriate design consideration could potentially lead to a condition where beam, column, and footing capacities are exceeded.

Incising factors are used for refractory species including Douglas Fir-Larch, Hem-Fir, and Spruce-Pine-Fir. Hem-Fir spans control for these three species combinations. Ponderosa Pine and Red Pine were sized using Northern Species design values except that the incising factor was not applied since Ponderosa Pine and Red Pine are not incised when treated. Since incising is not necessary for naturally durable wood (heartwood of the following species: decay-resistant Redwood and Cedars - corner sapwood is permitted if 90 percent or more of the width of each side on which it occurs is heartwood), Redwood and Western Cedar are also not incised. Since Ponderosa Pine, Red Pine, Redwood, and Western Cedar have comparable design values, Northern Species design values are used to calculate the controlling spans for these four species combinations.

Table C2. Conditions Where Deflection Controls Overhang Length*.

		Joist Spacing (o.c.)		
		12"	16"	24"
Species	Size	Allowable Overhang[3] (L_O)		
Southern Pine	2x6[6]	1' - 0"	1' - 1"	1' - 3"
	2x8	1' - 10"	2' - 0"	2' - 4"
	2x10	3' - 1"	3' - 5"	2' - 10"
	2x12	4' - 6"	4' - 2"	3' - 4"
Douglas Fir-Larch, Hem-Fir, Spruce-Pine-Fir[4]	2x6[6]	0' - 11"	1' - 0"	1' - 2"
	2x8	1' - 8"	1' - 10"	2' - 2"
	2x10	2' - 10"	3' - 2"	2' - 9"
	2x12	4' - 4"	3' - 11"	3' - 3"
Redwood, Western Cedars, Ponderosa Pine[5], Red Pine[5]	2x6[6]	0' - 9"	0' - 10"	0' - 11"
	2x8	1' - 5"	1' - 7"	1' - 9"
	2x10	2' - 5"	2' - 7"	2' - 8"
	2x12	3' - 7"	3' - 9"	3' - 1"

* Shading indicates overhang is deflection controlled. See Table 2 for footnotes.

BEAM SIZE & ASSEMBLY REQUIREMENTS

Deck beam spans are in accordance with Table 3 and can extend past the post centerline up to $L_B/4$ as shown in Figure 3. Beams are sized based on reaction load from joists within the span limits shown in Table 2. Joists are assumed to span from one side only; therefore, joists shall not be attached to opposite sides of the same beam. Allowing joists to span from opposite sides of the beam without appropriate consideration could potentially lead to a condition where beam capacity is exceeded.

With appropriate assumptions, Table 3 could be used to size beams with joists spanning from both sides. Since tabulated values for beams assume beams support clear span joists with overhangs, using 2 times the joist span for cases where joists span symmetrically (equal joist spans) from opposite sides is acceptable. For example, assume there are 8'-0" joists spanning from opposite sides of the same beam. The column in Table 3 labeled for 16'-0" joist spans can be used to size a beam in this case. A similar procedure is required for designing columns and footing sizes.

Douglas Fir-Larch, Hem-Fir and Spruce-Pine-Fir (refractory species) are combined with Redwood and Western Cedars (naturally durable species). Even though design values for these naturally durable species are lower than design values for these refractory species, the incising factors applied to strength and stiffness values of refractory species offset the differences. Therefore, span differences are minimal. Additionally, Ponderosa Pine and Red Pine were sized using Northern Species design values except that the incising factor was not applied since Ponderosa Pine and Red Pine are not incised when treated. Therefore, design values for the Northern Species combination (includes Ponderosa Pine and Red Pine) are used to calculate spans for all of these species.

Glued laminated timber beams in deck applications are required to be of naturally durable species or preservatively treated in accordance with AWPA U1. When oil-borne preservatives are used, the glued laminated timber industry recommends that the NDS wet service factor (C_M) not be used in this specific outdoor application; therefore, all glued laminated timber beams have been designed using design values based on dry service conditions. The adjustment factor of 0.89 in Table 3B, footnote 1, is based on the square root of the wet service adjustment factor of 0.8 for bending design values as specified in the *NDS Supplement* for glued laminated timber.

DECK FRAMING PLAN

A framing plan shows the layout of the primary structural system. Examples of structural elements include: joists, beams, ledger board, posts, footings, stringers, treads, and the type, size, and spacing of ledger board fasteners. Figure C5 shows an example of a typical deck framing plan.

For resistance of lateral loads, the deck is assumed to act as a diaphragm in an open-front structure. The decking, when nailed to the joists and rim joist, acts as sheathing in this diaphragm.

Larger aspect ratios may be permitted where calculations show that larger diaphragm deflections can be tolerated.

Copyright © 2018 American Wood Council

Figure C5. Example of a Typical Deck Framing Plan.

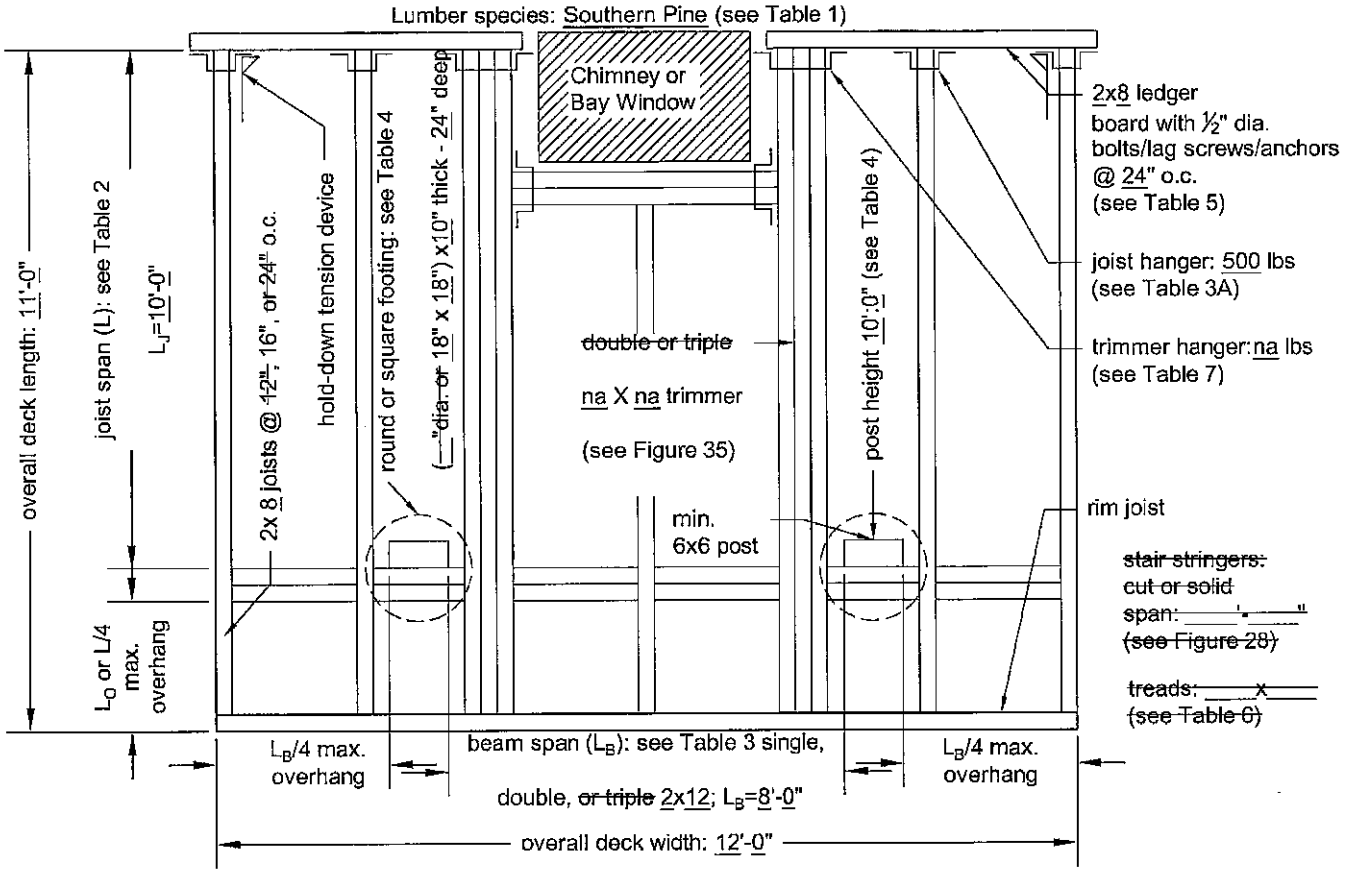

JOIST-TO-BEAM CONNECTION

Joist-to-beam connections must be installed to handle forces in several directions. Options 1 and 2 handle gravity loads through bearing of the joist to the beam, while Option 3 requires nails to resist these downward loads. All three options have been evaluated to ensure that an uplift load created by a 220 lbs point load at the end of a cantilevered joist will be resisted.

Connector manufacturers regard connectors with missing fasteners as improper installations and only support the product to be used with the type and number of fasteners specified in the product literature.

JOIST HANGERS

The loads listed in the Table 3A are derived from the worst case condition for each joist size based on Table 2 (379 lbs, 483 lbs, 571 lbs, and 675 lbs for Southern Pine joists spaced at 24" o.c. for 2x6, 2x8, 2x10, and 2x12, respectively).

Research has shown that joist hanger to ledger connections resist lateral loads. When permitted by the hanger manufacturer, the use of screws instead of nails to attach hangers to the ledger can decrease the potential for the joist to pull away from the ledger.

POST REQUIREMENTS

IRC section R407.3 specifies a minimum 4x4 (nominal) wood column size; however, it would often be overstressed in applications covered in this document. Requiring a minimum 6x6 post in *DCA 6* provides adequate bearing for beams. If posts are intended to resist lateral load conditions, then posts need to be designed per the *NDS*. An option of 8x8 nominal posts allows for a deck height of up to 14' in all cases shown in Table 4 footnote 5.

Prohibiting attachment of the beam to the sides of the post with fasteners only (Figure 9) ensures wood-to-wood bearing. Design of fasteners for wet-service conditions requires fairly significant capacity reductions and should be evaluated by a design professional.

For 3-ply 2-inch nominal beams, a post cap is required since the remaining cross section at the post notch would not be sufficient to provide adequate connection of the beam to the column. The connector shown in Figure 8B is readily available with corrosion protection and offers uplift and lateral load resistance.

Provisions for **Alternative Methods and Materials** allow for other post sizes and post-to-beam connections if approved by the building official. For example, in order to use a 4x4 post, a post cap connection as shown in Figure 8B would be required. There is not enough cross sectional area in a 4x4 to permit the let-in notch detail as shown in Figure 8A. Connector hardware for a 4x4 post is generally limited to support of 2-ply 2 inch nominal or 4 inch nominal beams. Certain post caps may be adjusted to fit a 3-ply 2 inch nominal member onto a 4x4 post, but must be special ordered. Contact a connector manufacturer to determine if there are solutions for connecting a single 3 inch nominal member onto a 4x4 post. See Table C4A: 4x4 Post Heights.

Diagonal bracing can contribute to the stiffness of the deck and, therefore, cause additional lateral loads on the posts. Since center posts receive more vertical load than corner posts, additional lateral load can cause overstress. For this reason, Figure 10 does not show the use of diagonal bracing on center posts.

The lateral force applied to corner posts is based on the capacity of the connection at the brace. Therefore, the full capacity of the brace connection is assumed to be developed and applied 2 feet below the beam.

Table C4A. No. 2 Grade 4x4 Maximum Post Heights.

Beam Span, L_B	Joist Span L_J	Post Heights[1]				
		Southern Pine	Douglas Fir-Larch[2]	Hem-Fir[2], Western Cedars	Redwood	Ponderosa Pine, Red Pine, SPF[2]
6'	<10'	4'	2'	3'	4'	3'
	<14'	3'	2'	2'	3'	2'
	<18'	2'	2'	2'	2'	2'
8'	<10'	3'	2'	2'	4'	2'
	<14'	2'	2'	2'	3'	2'
	<18'	2'	2'	2'	2'	2'
10'	<10'	3'	2'	2'	3'	2'
	<14'	2'	2'	2'	2'	2'
	<18'	2'	2'	2'	2'	2'
12'	<10'	2'	2'	2'	2'	2'
	<14'	2'	2'	2'	2'	2'
	<18'	2'	2'	2'	2'	2'
14'	<10'	2'	2'	2'	2'	2'
	<14'	2'	2'	2'	2'	2'
	<18'	2'	2'	2'	2'	NP
16'	<10'	2'	2'	2'	2'	2'
	<14'	2'	2'	2'	2'	2'
	<18'	2'	2'	2'	2'	NP
18'	<10'	2'	2'	2'	2'	2'
	<14'	2'	2'	2'	2'	NP
	<18'	2'	2'	NP	2'	NP

1. Assumes 40 psf live load, 10 psf dead load, $L_B/4$ and $L_J/4$ overhangs, No 2. grade and wet service conditions.
2. Incising assumed for Douglas Fir-Larch, Hem-Fir, and Spruce-Pine-Fir.

FOOTINGS

Footing sizes are based on the assumptions of 1,500 psf soil bearing capacity and 2,500 psi compressive strength of concrete which are the minimum values based on *IRC* Tables R401.4.1 and R402.2. See Table C4B for footing sizes with higher soil bearing capacities. A concrete weight of 150 pcf is also assumed, which makes solving for the footing size an iterative process. The following equations may be used to size footings for other assumptions (see Figure C12):

Post load (lbs):

$$R = 50\left(\frac{L_{Joist}}{2} + L_{Joist\ Overhang}\right)\left(L_{Beam}\right) + 150\frac{B^2T}{1728}$$

or

$$R = 50\left(\frac{L_{Joist}}{2} + L_{Joist\ Overhang}\right)\left(L_{Beam}\right) + 150\frac{\pi D^2T}{6912}$$

where: L units are in feet and B, D, and T are in inches.

Square footing (in.): $B = 12\sqrt{\frac{R}{(\text{soil capacity})}}$

Round footing (in.): $D = 12\sqrt{\frac{4R}{(\text{soil capacity})\pi}}$

Footing thickness (in.): $T \geq P$; $T \geq \frac{(B\,\text{or}\,D) - 5.5}{2}$

Figure C12. Footing Dimensions and Variables.

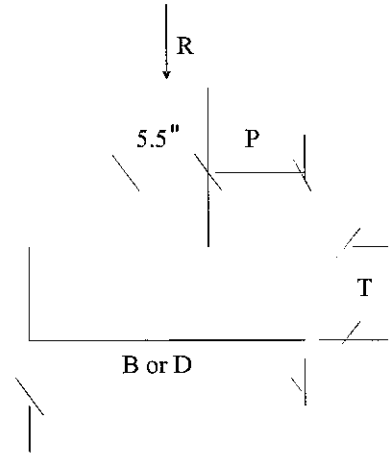

Table C4B. Footing Sizes for Higher Soil Bearing Capacities.

Beam Span, L_B	Joist Span L_J	2000 psf			2500 psf			3000 psf		
		Round Footing Diameter	Square Footing	Footing Thickness	Round Footing Diameter	Square Footing	Footing Thickness	Round Footing Diameter	Square Footing	Footing Thickness
6'	≤10'	15"	13"x13"	6"	14"	12"x12"	6"	12"	11"x11"	6"
	≤14'	18"	16"x16"	7"	16"	14"x14"	6"	15"	13"x13"	6"
	≤18'	20"	18"x18"	8"	18"	16"x16"	7"	16"	15"x15"	6"
8'	≤10'	17"	15"x15"	6"	16"	14"x14"	6"	14"	13"x13"	6"
	≤14'	21"	18"x18"	8"	18"	16"x16"	7"	17"	15"x15"	6"
	≤18'	23"	21"x21"	9"	21"	18"x18"	8"	19"	17"x17"	7"
10'	≤10'	19"	17"x17"	7"	17"	15"x15"	6"	16"	14"x14"	6"
	≤14'	22"	21"x21"	9"	20"	18"x18"	8"	19"	17"x17"	7"
	≤18'	26"	23"x23"	11"	23"	21"x21"	9"	21"	19"x19"	8"
12'	≤10'	21"	19"x19"	8"	19"	17"x17"	7"	17"	15"x15"	6"
	≤14'	25"	22"x22"	10"	22"	20"x20"	9"	20"	18"x18"	8"
	≤18'	29"	26"x26"	12"	26"	23"x23"	11"	23"	21"x21"	9"
14'	≤10'	23"	21"x21"	9"	20"	18"x18"	8"	19"	17"x17"	7"
	≤14'	27"	24"x24"	11"	24"	22"x22"	10"	22"	20"x20"	9"
	≤18'	31"	28"x28"	13"	28"	24"x24"	12"	25"	22"x22"	10"
16'	≤10'	25"	22"x22"	10"	22"	19"x19"	9"	20"	18"x18"	8"
	≤14'	29"	26"x26"	12"	26"	23"x23"	11"	24"	21"x21"	10"
	≤18'	33"	30"x30"	14"	30"	26"x26"	13"	27"	24"x24"	11"
18'	≤10'	26"	23"x23"	11"	23"	21"x21"	9"	21"	19"x19"	8"
	≤14'	31"	28"x28"	13"	28"	24"x24"	12"	25"	22"x22"	10"
	≤18'	36"	32"x32"	16"	31"	28"x28"	13"	28"	25"x25"	12"

Footnote 2 of Table 4 allows for the footing thickness and size to be reduced for corner posts since the tabulated values assume center posts, which resist more vertical load. The factor is 0.9 because of additional load applied from the diagonal (knee) brace.

Coordinating the footing thickness with post base and anchor requirements means ensuring that post anchor length does not exceed the thickness of the footing.

Additional footing options were added to the 2012 version of *DCA 6* Figure 12. One allows for a 12" diameter concrete stem to reduce the amount of concrete required. The second provides an option for a fully embedded post in concrete with a gravel base to allow for water drainage. However, note that when the embedded post option is used to resist lateral loads, the post must be designed per the *NDS*.

LEDGER ATTACHMENT REQUIREMENTS

Fastener spacing requirements in Table 5 are based on *2015 IRC* R507.2.1, which is based on testing at Virginia Tech and Washington State University (Carradine et al., 2006). Testing was conducted for three common deck ledger constructions using ½" diameter lag screws and bolts. In the tests, two types of band joist materials were used: 2x10 Spruce-Pine-Fir (SPF) lumber and 1-inch-thick Douglas-Fir (DF) laminated veneer lumber (LVL) rim board. SPF has a relatively low specific gravity of G = 0.42, so other denser species groupings (e.g., Hem-Fir, Douglas-Fir-Larch, and Southern Pine) can be conservatively substituted. Thicker LVL products with equivalent specific gravities of 0.50 or greater can be conservatively substituted for the LVL band joist material tested. In addition, manufactures of EWP rim boards may publish capacity and spacing requirement for their rim boards that can be used when designing attachment of ledgers to rim boards.

According to *IRC* R311.3.1, the distance from the top of the threshold to the top of deck boards cannot exceed 1½". If a door does not swing over the landing or deck, the step-down can be up to 7¾". The ledger can be lowered for improved drainage, subject to meeting maximum step-down heights for accessibility and means of egress, edge distance and spacing requirements, and shear design at connection requirements of *NDS* 3.4.3.3(a).

The basis for edge distances and spacing between rows (Figure 19) is *NDS* Tables 11.5.1C and 11.5.1D, respectively, for perpendicular to grain conditions. Per *NDS* Table 11.5.1C, edge distance is 4D (where D is fastener diameter) for the loaded edge. For ½" diameter bolts, 4D = 2" edge distance.

Per *NDS* Table 11.5.1D, spacing between rows is based on the ℓ/d ratio of the fastener. For a 1½" ledger and rim board, ℓ/d = 1½" / ½" = 3 and the minimum spacing is $(5\ell + 10D) / 8 = 1^{9}/_{16}$" – this is rounded up to $1^{5}/_{8}$". Per 11.5.1.3 of the *NDS*, the maximum spacing between fasteners is 5". This requirement is based on potential shrinkage of the ledger which could create tension perpendicular to grain stresses if the outer edges of the ledger are constrained by bolts.

The requirement for minimum distance between the top of the ledger and the bottom row of fasteners (Figure 19) is based on *NDS* 3.4.3.3(a) for shear design at connections. When the connection is less than five times the depth, 5d, of the bending member from its end, the adjusted design shear is calculated as follows:

$$V_r' = \left[\frac{2}{3}F_v' b d_e\right]\left[\frac{d_e}{d}\right]^2$$

Solving for d_e yields the following:

$$d_e^3 = 3\, V_r\, d^2 / (2\, F'_v\, b)$$

Assuming a Hem-Fir No. 2 ledger, the reference horizontal shear design value, F_v = 150 psi. The adjusted shear design value, F'_v, is based on a wet service factor, C_M = 0.97, and incising factor, C_i = 0.80. The maximum allowable lateral design value of 725 lbs for ½" bolts and 385 lbs for ½" lag screws - is based on testing at Virginia Tech and Washington State University (Carradine et al., 2006). Spacing calculations assume that bolts or lag screws at the end of the ledger have half the tributary area of interior bolts or lag screws and that the shear at interior bolts or lag screws is half of the interior bolt or lag screw reaction. Therefore, the minimum value of d_e is calculated assuming V_r equals one-half of the allowable lateral design value for the ½" bolts (725/2 lbs) or ½" lag screws (385/2 lbs). Resulting values of d_e are as follows:

	½" bolts	½" lags
2x8	d_e = 5.47"	d_e = 4.43"
2x10	d_e = 6.43"	d_e = 5.21"
2x12	d_e = 7.33"	d_e = 5.9"

The problem with these effective depths is that a 2x8 ledger connected to a 2x8 band joist with bolts will not work (see Figure C19).

Possible solutions for the 2x8 band joist include:

1) Non-ledger deck.

2) Require lag screws for 2x8 band joist and revise required $d_e = 4½"$ as shown in Figure 19.
3) Allow bolted connections for 2x8 band joist if bolt spacing is reduced to the same as that for lag screws (only applies to ½" bolts without stacked washers as shown in Table C5) as shown in Figure 19.
4) Reduce bolt spacing requirements for 2x8 ledger to 2x8 band joist. When $d_e = 4.5"$, $V_r = 202$ lbs, and the back-calculated adjustment factor is 0.56. Based on Table 2, the maximum joist span for a 2x8 is 10'-6". This results in revised spacing for ½" bolts as shown in Table C5.

To achieve the minimum spacing requirements noted above, a nominal 2x8 ledger is required even if the deck joists are 2x6's.

Table C5. Revised Bolt Spacing Requirements for 2x8 Ledgers to 2x8 Band Joists.

	Joist Span			
	6'-0" & less	6'-1" to 8'-0"	8'-1" to 10'-0"	10'-1" to 12'-0"
½" bolt	32"	24"	19"	16"
½" bolt with ½" stacked washers	27"	20"	16"	13"

Continuous flashing is required as shown in Figure 14 to prevent water intrusion behind the ledger. One alternative to this detail would be continuous flashing with a drip edge; however, this would be labor intensive because the flashing would require notching at every deck joist location.

Connection of ledgers to existing empty or hollow masonry cell blocks (Figure 15) is generally not practical because most manufacturers of concrete block anchors do not publish allowable shear values for a ledger connected to empty hollow masonry block of unknown compression and breakout strength. Due to the uncertainty and lack of test data for this application, use of a non-ledger deck is recommended (see Figure 21).

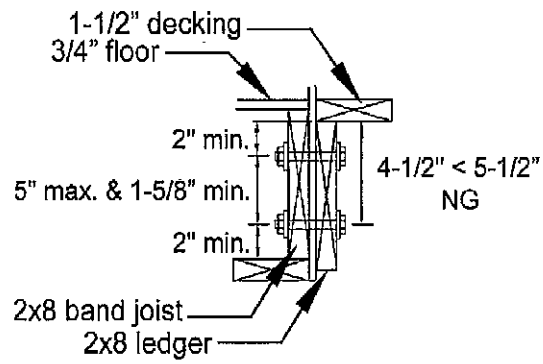

Figure C19. Edge Distance and Spacing Requirements for 2x8 Band Joist and 2x8 Ledger.

NON-LEDGER DECKS — FOR RESISTING VERTICAL LOADS

The provisions of *DCA 6* assume that the primary structure is used for lateral stability. A non-ledger deck, as defined in this document, is vertically independent of the primary structure but still relies on the primary structure to resist lateral loads; whereas, a free-standing deck is both vertically and laterally independent.

DECK LATERAL LOADS

Item 10 of *DCA 6* Minimum Requirements & Limitations states that the document does not address lateral stability issues beyond those addressed in Section R507.2.4 of the *IRC*.

IRC R507.1 requires anchorage of the deck to the primary structure to resist lateral loads. Further, the *IRC* includes hold-down tension devices as a prescriptive means to achieve compliance with the lateral load connection requirements without requiring engineering. See *IRC* Section R507.2.4. Figure R507.2.3(2) was added to the *IRC* in the 2015 edition, but equivalent performance to the existing prescriptive solution has not been demonstrated. Consequently, two 1500 lbs capacity tension devices are still shown in *DCA 6*. In lieu of the prescriptive hold-down tension devices specified, an alternate engineered or approved connection detail would be required.

Where deck joists are perpendicular to the house floor joists, blocking between house joists and boundary nailing of the house floor diaphragm to the blocking is required for the installation of hold-down tension devices.

For connecting the hold down tension devices to I-joists, a detail recommended by the Wood I-Joist Manufactures Association and similar to Figure R507.2.3(1) of the *IRC*, is provided.

For non-ledger decks, Figures 22 and 23 prescribe three methods of transferring lateral loads from deck joists to the rim board: joist hangers (as shown), blocking, or use of framing angles. This connection is to transfer forces acting parallel to the house. A connection equal to the diaphragm capacity of single layer diagonal boards, or approximately 300 plf, is required.

Diagonal (knee) bracing is commonly used on decks to help resist lateral forces and provide increased stiffness; however, the IRC does not prescribe diagonal bracing. See Post Requirements for more on the implications of diagonal bracing.

Figures 22 and 23 show nailing from above through floor sheathing and into floor joists or blocking between floor joists of the house. An equivalent connection from underneath is permissible using framing angles and short fasteners to penetrate into the floor sheathing.

GUARD REQUIREMENTS

Figure 24 requires that openings not allow the passage of a 4" diameter sphere. However, it does not address openings underneath a fixed deck bench used in place of guards. All openings, including those underneath benches used in place of guards, shall not allow the passage of a 4" diameter sphere.

Additionally, if fixed seating is adjacent to guards, the guard height should be measured from the seat rather than the deck surface. While 2015 *IRC* Section R312.1.2 allows for the guard height to be measured from the walking surface, *DCA 6* requires measurement from fixed seating as a best practice. This will help minimize exposure to falls over the top of the guard due to individuals standing on deck seats.

IRC Table R301.5 requires guard in-fill components (all those except the handrail), balusters, and panel fillers to be designed to withstand a horizontally applied normal load of 50 pounds on an area equal to 1 square foot. This load need not be assumed to act concurrently with any other live load requirement. Baluster connection requirements shown in Figure 24 have been designed to resist that load.

GUARD POST ATTACHMENTS FOR REQUIRED GUARDS

Both the *IRC* and *International Building Code (IBC)* specify that guardrails and handrails be capable of resisting a minimum concentrated live load of 200 lbs applied in any direction for required guard rails (See *IRC* R312.1). Commonly used residential guardrail post connections were laboratory tested at the required load level for a code-conforming assembly per the *IBC* (Loferski et al., 2006). A commercially available connector, typically used in shear wall construction, was tested in a post-to-deck residential guardrail assembly. The connection passed a load test based on code provisions for a "tested assembly." Connection details in Figures 25 and 26 reflect these test results.

A minimum requirement of 1,800 lbs for the hold-down connector ensures adequate capacity (Loferski et al., 2005) for a 36" maximum rail height. A higher rail height requires design of a higher capacity connector. Manufacturers' tabulated values for hold-down connectors typically include a load duration (C_D) increase of 60% since connectors for shear walls are used to resist wind and seismic loads. The 200 lbs concentrated load requirement for guard rails is assumed to be a 10 minute load duration (e.g. it would not see a maximum 200 lbs outward load for more than 10 minutes cumulatively in its lifetime). Therefore, C_D=1.6 is used for hold-downs in this application.

This section requires deck guard posts to be at least 4x4 nominal with a reference bending design value not less than 1,100 psi to ensure sufficient bending stress in the post. Assuming the lever arm is 39.5" (36" + 1½" deck board + 2" edge distance), the bending moment is 39.5" x 200 lbs = 7,900 in-lbs. Bending stress, f_b, is calculated as follows:

$M/S_{(4x4)}$ = 7,900 in-lbs / 7.146 in^3 = 1,106 psi.

No. 2 grades of all Table 2 species meet this requirement with the following assumptions. The adjusted bending design value, F'_b, is based on a wet service factor, C_M = 0.85, and incising factor, C_i = 0.80 (Douglas Fir-Larch, Hem-Fir, Spruce-Pine-Fir). A load duration factor, C_D = 1.6, is assumed for consistency with the hold-down device used to connect the guard to the joist.

Figures 25 and 26 show minimum and maximum spacing requirements for bolts in deck joists and deck rim boards. The 5" maximum spacing is per *NDS* 11.5.1.3. This requirement is based on potential shrinkage of the joist or rim board which could create tension perpendicular to grain stresses if the outer edges of the deck joist or rim are constrained by bolts. To achieve the minimum spacing requirements, a nominal 2x8 or wider (deeper) outside joist or rim board is required.

STAIR REQUIREMENTS

Figure 29 shows 5/4 boards spanning 18" or less. As noted under DECKING REQUIREMENTS commentary, specific products classified by size as decking are usually assigned a recommended span of 16" or 24".

Additionally, *IRC* Table R301.5 footnote (c) requires a 300 lbs concentrated load check on stair treads. Analysis revealed that 2x8 No. 2 Southern Pine works for a 34½" span (36" minus ¾" bearing at each end) when the 300 lbs is distributed across 2 inches (e.g. 150 pli), based on L/288 deflection criteria (ICC ES Acceptance Criteria 174 requires $^1/_8$" deflection limit: 36"/$^1/_8$" = 288). No species will calculate for that span using 2x6 No. 2 grade.

Solid stringers were analyzed as simple span beams using the horizontal span not the actual stringer length. Cut stringers were analyzed with 5.1" depth which is based on 7.75:10 rise to run ratio. A size factor, C_F, of 1.0 is used since 2x12 is the size basis.

STAIR FOOTING REQUIREMENTS

Stair stringers should be supported by bearing at the end where the stairway meets grade. The detail shown assumes a 40 psf live load and 10 psf dead load over a tributary area of 18" and one-half of the maximum span of 13'-3" permitted for solid stringers. This calculates to 500 lbs. For Southern Pine, seven #8 wood screws would be required. Northern Species would require eleven #8 wood screws (16d box or common threaded nails would be comparable).

While bolts are sometimes used for this detail, proximity to the end of the stringer could lead to splitting of the stringer – especially cut stringers. The 2x4 bearing block alleviates this situation. However, in addition to the bearing block, bolts would also be required to provide lateral support if a guard post is used.

FRAMING AT CHIMNEY OR BAY WINDOW

IRC R502.10 on framing of openings states: "Openings in floor framing shall be framed with a header and trimmer joists. Where the header joist span does not exceed 4 feet, the header joist may be a single member the same size as the floor joist. Single trimmer joists shall be used to carry a single header joist that is located within 3feet of the trimmer joist bearing. Where the header joist span exceeds 4 feet, the trimmer joists and the header joist shall be doubled and of sufficient cross section to support the floor joists framing into the header."

Trimmer Joist Size and Span Limited by Concentrated Load from the Header

Where the header frames into the trimmer joist, a concentrated load is created. This condition was evaluated assuming one ply of a double trimmer joist carries the uniform load and one ply carries the point load from a 6' header. The analysis revealed that the distance from the end of the trimmer joist to the point where the header frames into it – designated as dimension "a" – must be limited. The maximum distance was calculated based on joist spans given in Table 2. A maximum distance of a = 3' was chosen to cover common framing conditions. Triple trimmer joists are required on each side of the header if joist spacing is 12" or 16" o.c., or if the trimmer joist span exceeds 8'-6"; otherwise a double trimmer joist is permitted. If "a" is less than that shown in Table C7a, a double trimmer joist is also permitted.

Bending and shear were checked to determine the reduction in a double trimmer joist span when carrying a 6' header. For a simple span beam, with a concentrated load offset from the center, maximum moment is calculated as Pab/L_J and maximum shear is calculated as Pb/L_J, where P is the concentrated load based on the tributary area carried by the header, $b = L_J - a$, and L_J is the trimmer joist span.

Moment controlled for this analysis in determining a_{max}. While shear was evaluated, the NDS permits the shear load to be reduced within a distance "d" (equal to the joist depth) from the end of the joist. With that reduction, shear did not control any of the spans evaluated.

Table C7a. Maximum Distance "a" from Trimmer Joist End to a Point where a 6' Header Frames into a 2-ply Trimmer Joist.

Species	Trimmer Size	a_{max}
Southern Pine	2-2x6	15"
	2-2x8	17"
	2-2x10	19"
	2-2x12	25"
Douglas Fir-Larch, Hem-Fir, SPF[1]	2-2x6	11"
	2-2x8	14"
	2-2x10	16"
	2-2x12	19"
Redwood, Western Cedars, Ponderosa Pine[2], Red Pine[2]	2-2x6	10"
	2-2x8	13"
	2-2x10	16"
	2-2x12	18"

1. Incising assumed for Douglas Fir-Larch, Hem-Fir, and Spruce-Pine-Fir.
2. Design values based on Northern Species with no incising assumed.

The trimmer hanger capacities listed in Table 7 are based on Southern Pine joist spans at 12" o.c. or 16" o.c. spacing (whichever controls). The reaction is a combination of the concentrated header load Pb/L_J and the tributary uniform load between the trimmer and the next adjacent joist. Another way of tabulating trimmer hanger capacities is shown in Table C7c based on trimmer spans. Table C7c is based on the header framing into the trimmer at 1' (a=1', see Figure 35). Table C7c will be conservative for larger protrusions (larger "a" values.) Linear interpolation of tabulated values is permitted.

Trimmer Joist Span Limited by Concentrated Load on the Ledger

Bolts or lag screws used to attach the trimmer hanger to the ledger are required to fully extend through the ledger into the band joist or rim board. If a typical face mounted hanger is installed where only nails are used to attach the hanger to the ledger, the ledger would carry a large portion of the load. Since a concentrated load would be created on the ledger, it would be resisted by the bolts at the end of the ledger. As discussed under **LEDGER ATTACHMENT REQUIREMENTS**, the provisions for minimum distance, d_e, between the top of the ledger and the bottom row of fasteners (Figure 19) is based on NDS 3.4.3.3(a) for shear design at connections. Based on this analysis, trimmer joist lengths would need to be limited to the maximum trimmer joist spans shown in Table C7b, regardless of the trimmer joist species or number of plies. Since this analysis is based on a simple span trimmer joist, a trimmer joist with an overhang of up to $L_J/4$ would be conservative. The load on the end of the cantilever would reduce the reaction at the ledger.

Table C7b. Maximum Trimmer Joist Span (L_J) Based on Distance "a" from the Trimmer Joist End to the Point where the Header Frames into the Trimmer.[1,4]

Ledger Species	Size	a = 1'	a = 2'	a = 3'
Southern Pine	2x8[5]	5' - 9"	7' - 5"	8' - 11"
	2x10	9' - 2"	10' - 11"	12' - 7"
	2x12	9' - 5"	11' - 2"	12' - 10"
Douglas Fir-Larch, Hem-Fir, Spruce-Pine-Fir[2]	2x8[5]	4' - 6"	6' - 0"	7' - 6"
	2x10	6' - 10"	8' - 6"	10' - 1"
	2x12	7' - 0"	8' - 9"	10' - 4"
Ponderosa Pine[3], Red Pine[3], Redwood, Western Cedar	2x8[5]	4' - 3"	5' - 9"	7' - 3"
	2x10	6' - 5"	8' - 1"	9' - 8"
	2x12	6' - 7"	8' - 3"	9' - 10"

1. Assumes 6' header span. See Figure 35 for header, trimmer, and ledger framing details.
2. Incising assumed for Douglas Fir-Larch, Hem-Fir, and Spruce-Pine-Fir.
3. Design values based on Northern Species with no incising assumed.
4. Shading indicates where triple trimmers are required. See text for alternate 2-ply trimmer conditions.
5. Applies to 2x6 trimmer joist spans as well.

Table C7c. Trimmer Joist Hanger Vertical Capacity Based on Trimmer Span.

Trimmer Span	Minimum Capacity, lbs
8'	660
10'	860
12'	1060
14'	1260
16'	1325
18'	1430

Examples

1) Assume a 2x10 Redwood joist spanning 12'-0" at 16" o.c. (per Table 2) framing around a 5' wide by 2'-6" deep chimney. Set a 6' header 3' from the end of the trimmer joist. A triple trimmer joist is required since the span exceeds 8'-6". If the trimmer hanger does not attach through the ledger to the rim board or band joist, the trimmer joist span is limited to 9'-8" per Table C7b. Several solutions exist:

- Reduce all joist spans to 9'-8".
- $L_J/4$ = 2'-5" so $L_J + L_J/4$ = 12'-1" total joist length, which would provide the same square footage.
- Place a post under the center of the header to reduce the header span.

2) Assume a 2x8 Western cedar joist spanning 8'-0" at 24" o.c. (per Table 2) framing around a 5' wide by 1.5' deep bay window. Set a 6' header 2' from the end of the trimmer joist. A double trimmer joist is permitted since the spacing is 24" o.c. If the trimmer hanger does not attach through the ledger to the rim board or band joist,

the trimmer joist span is limited to 5'-9" per Table C7b. Several solutions exist:

- Reduce all joist spans to 5'-9".
- Place a post under the center of the header to reduce the header span.
- Increase joist size to 2x10 which will span 8'-1" per Table C7b.

3) Assume a 2x12 Southern Pine joist spanning 18'-0" at 12" o.c. (per Table 2) framing around a 5' wide by 1'-6" deep bay window. Set a 6' header 2' from the end of the trimmer joist. A double trimmer joist is permitted since a = 24" which is less than a_{max} = 25" in Table C7a. However, if the trimmer hanger does not attach through the ledger to the rim board or band joist, the trimmer joist span is limited to 11'-2" per Table C7b. Several solutions exist:

- Reduce all joist spans to 11'-2".
- Place a post under the center of the header to reduce the header span.

REFERENCES

2015 International Building Code (IBC), International Code Council (ICC), Washington, DC, 2015.

2015 International Residential Code (IRC), International Code Council (ICC), Washington, DC, 2015.

AC174 Acceptance Criteria for Deck Board Span Ratings and Guardrail Systems (Guards and Handrails), International Code Council Evaluation Service, Washington, DC, 2014.

ANSI/AWC NDS-2015 National Design Specification (NDS) for Wood Construction, American Wood Council, Leesburg, VA, 2015.

ASTM D245-06 Standard Practice for Establishing Structural Grades and Related Allowable Properties for Visually Graded Lumber, ASTM, West Conshohocken, PA, 2011.

ASTM D2555-06 Standard Practice for Establishing Clear Wood Strength Values, ASTM West Conshohocken, PA, 2001.

ASTM F547-06 Standard Terminology of Nails for Use with Wood and Wood-Base Materials, ASTM, West Conshohocken, PA, 2012.

AWPA Book of Standards, American Wood Protection Association, Birmingham, AL, 2017.

Carradine, D. M., Donald Bender, Joseph R. Loferski, and Frank E. Woeste. "Residential Deck Ledger Connection Testing and Design." *Wood Design Focus*. Vol. 16, No. 2. Forest Products Society. Madison, WI. Summer 2006.

Loferski, Joseph R., Dustin Albright, and Frank E. Woeste. "Tested Guardrail Post Connections for Residential Decks." *Wood Design Focus*. Vol. 16, No. 2. Forest Products Society. Madison, WI. Summer 2006.

Loferski, Joseph R. and Frank E. Woeste. "Strong Rail-Post Connections for Wooden Decks." *Journal of Light Construction*. Williston, VT. February 2005.

Policy for Evaluation of Recommended Spans for Span Rated Decking Products, American Lumber Standard Committee, Germantown, MD. 2004.